GENERAL NOTES:

1. USE STRUCTURAL DRAWINGS IN CONJUNCTION WITH PROJECT DRAWINGS BY OTHER DISCIPLINES AND WITH THE SPECIFICATIONS.

2. UNLESS DETAILED, SPECIFIED, OR INDICATED OTHERWISE, CONSTRUCTION SHALL BE AS INDICATED IN THE GENERAL NOTES AND TYPICAL DETAILS.

3. PRESENTATION CONVENTIONS FOR STRUCTURAL DRAWINGS:

   A. SCREENED LINE WORK INDICATES EXISTING CONDITIONS.
   B. WRITTEN DIMENSIONS TAKE PRECEDENCE OVER SCALED SIZES.
   C. PLANS ARE TREATED AS HORIZONTAL SECTIONS. (I.E.: "PLAN AT ELEVATION 110" SHOWS CONSTRUCTION AT AND BELOW ELEVATION 110.)

4. VERIFY DIMENSIONS AND CONDITIONS BEFORE BEGINNING WORK. ADVISE ENGINEER IMMEDIATELY OF DISCREPANCIES BETWEEN EXISTING CONDITIONS AND DIMENSIONS, AND INFORMATION SHOWN ON THESE DRAWINGS. CONFIRM THE FOLLOWING BEFORE PREPARATION AND SUBMITTAL OF SHOP DRAWINGS:

   A. DIMENSIONS AND WEIGHTS FOR EQUIPMENT SELECTED.
   B. SIZES AND LOCATIONS OF EQUIPMENT PADS FOR EQUIPMENT SELECTED.

5. TYPICAL DETAILS ARE INCLUDED ON THE "TS" DRAWINGS.

   A. TYPICAL DETAILS ARE INTENDED TO APPLY AT LOCATIONS DESCRIBED BY THEIR TITLES, EVEN WHEN NOT SPECIFICALLY REFERENCED ON THE DRAWINGS.
   B. IN STRUCTURAL TYPICAL DETAILS, ORIENTATION OF BARS IN EACH MAT OF REINFORCEMENT (WHETHER "LINES" OR "DOTS"ARE CLOSER TO THE FACE OF THE CONCRETE) IS GENERALLY ARBITRARY. SEE DRAWINGS OF EACH STRUCTURE FOR ORIENTATION REQUIRED AT THAT STRUCTURE.

6. SEE CIVIL DRAWINGS FOR STRUCTURE COORDINATES. POINTS ON THE STRUCTURES TO WHICH SITE COORDINATES REFER ARE SHOWN ON THE STRUCTURAL PLANS.

7. DRAWINGS PREPARED BY OTHER DISCIPLINES INCLUDE OPENINGS, ANCHORS, PIPES, CONDUITS, AND OTHER ITEMS THAT ARE EMBEDDED INTO OR PASS THROUGH STRUCTURES.

   A. CONFIRM SIZE AND LOCATIONS OF OPENINGS, PENETRATIONS AND EMBEDMENT FOR ITEMS AND EQUIPMENT FURNISHED.
   B. IN GENERAL, OPENINGS, EMBEDMENTS, AND PENETRATIONS LESS THAN 12 INCHES IN DIAMETER ARE NOT SHOWN ON THE STRUCTURAL DRAWINGS.
   C. SEE MECHANICAL DRAWINGS FOR DETAILS OF PIPE PENETRATIONS, PIPE SUPPORTS, AND ASSOCIATED STRUCTURAL REQUIREMENTS.
   D. SEE MECHANICAL DRAWINGS FOR EQUIPMENT PADS AND PIPE SUPPORTS.

8. SEE ARCHITECTURAL DRAWINGS FOR LOCATIONS AND SIZES OF DOOR AND WINDOW OPENINGS.

STRUCTURAL DESIGN CRITERIA - GENERAL:

SEE DRAWINGS OF INDIVIDUAL STRUCTURES FOR SPECIFIC DESIGN CRITERIA BASED ON THESE OVERALL CRITERIA FOR THE SITE.

1. BUILDING CODE:

   A. 2019 CALIFORNIA BUILDING CODE ASCE 7-16 MINIMUM DESIGN LOADS FOR BUILDING AND OTHER STRUCTURES.

2. STRUCTURE RISK CATEGORY: SEE PLANS FOR EACH STRUCTURE.

3. DEAD LOADS: CALCULATED FOR STRUCTURE SELF-WEIGHT.

4. LIVE LOADS: (REDUCTIONS NOT USED)

   A. FLOOR LIVE LOAD: SEE PLANS.
   B. GRATING AND CHECKERED PLATE: 100 PSF (UNO).
   C. ROOF LIVE LOAD: SEE PLANS (20 PSF MINIMUM).
   D. EQUIPMENT LOADS: SEE PLANS.
   E. CONCENTRATED AND IMPACT LOADS: SEE PLANS.

5. FLUID PRESSURE LOADS: 63 PSF/FT (UNO).

6. WIND DESIGN DATA:
   FOR DESALINATION FACILITY
   A. SPECIAL WIND REGION: NO - HURRICANE: NO
   B. WIND-BORNE DEBRIS REGION:
   C. BASIC WIND SPEED (3 SEC GUST, 33 FEET ABOVE GROUND): 115 MPH.

7. EARTHQUAKE DESIGN DATA: FOR DESALINATION FACILITY

		0.2 SECOND	*1.0 SECOND
A.	SITE CLASS: __C___.		
B.	MAPPED SPECTRAL RESPONSE ACCELERATIONS:	Ss = 1.591 g	S1 = 0.544 g
C.	SITE COEFFICIENTS:	Fa = 1.2	Fv = 1.46
D.	MAXIMUM CONSIDERED ACCELERATIONS:*	Sms =1.91 g	Sm1 = 0.793 g
E.	DESIGN SPECTRAL RESPONSE ACCELERATIONS:*	Sds = 1.273 g	Sd1 = 0.528 g

   (* 5% DAMPED)

8. FLOOD LOADS:

   A. FLOOD HAZARD AREA: NO

FOR BRINE PIPE LINE

A. SITE CLASS D (STIFF SOIL)		
B. MAPPED SPECTRAL RESPONSE ACCELERATIONS	Ss = 1.699g	S1 = 0.573g
C. SITE COEFFICIENTS	Fa = 1	Fv = NULL
	Fv = SEE SECTION 11.4.8	
D. MAXIMUM CONSIDERED ACCELERATIONS*	Sms = 1.699g	Sm1 = NULL
	Sm1 = SEE SECTION 11.4.8	
E. DESIGN SPECTRAL ACCELERATIONS*	Sds = 1.133g	Sd1 = NULL
(* 5% DAMPED)	Sd1 = SEE SECTION 11.4.8	

FOR RIVER PUMP STATION

A. SITE CLASS D (STIFF SOIL)		
B. MAPPED SPECTRAL RESPONSE ACCELERATIONS	Ss = 1.557g	S1 = 0.529g
C. SITE COEFFICIENTS	Fa = 1	Fv = NULL
	Fv = SEE SECTION 11.4.8	
D. MAXIMUM CONSIDERED ACCELERATIONS*	Sms = 1.557g	Sm1 = NULL
	Sm1 = SEE SECTION 11.4.8	
E. DESIGN SPECTRAL ACCELERATIONS*	Sds = 1.038g	Sd1 = NULL
(* 5% DAMPED)	Sd1 = SEE SECTION 11.4.8	

9. CONSTRUCTION LOADS:
   STRUCTURES HAVE BEEN DESIGNED FOR OPERATING LOADS ON COMPLETED FACILITIES. UNTIL CONSTRUCTION IS COMPLETE AND MEMBERS HAVE ACHIEVED THEIR DESIGN STRENGTH, PROTECT STRUCTURES AS REQUIRED BY SHORING, BRACING, AND BALANCING.

GEOTECHNICAL REPORT / FOUNDATION DESIGN CRITERIA:

1. GEOTECHNICAL INVESTIGATION REPORT:

   TITLE: GEOTECHNICAL INVESTIGATION: VOLUME I TO IV GEOTECHNICAL DATA REPORT , CITY OF ANTIOCH
   PREPARED BY: HULTGREN - TILLIS.
   REPORT NO: 909.1 DATED:JUNE 24 2020.

2. FOUNDATION DESIGNS ARE BASED ON RECOMMENDATIONS IN THE GEOTECHNICAL INVESTIGATION REPORT.

   A.
   I. SHALLOW FOUNDATIONS SHOULD BE DESIGNED USING ALLOWABLE BEARING PRESSURES OF 3,000 POUNDS PER SQUARE FOOT (PSF) FOR DEAD PLUS SUSTAINED LIVE LOADS AND 4,500 PSF FOR TOTAL LOADS INCLUDING WIND OR SEISMIC FORCES.

   II. FOUNDATIONS AND FOOTINGS FOR CLEAR WELL 'A' STRUCTURES SHOULD BE DESIGNED USING ALLOWABLE BEARING PRESSURES OF 2,500 POUNDS PER SQUARE FOOT(PSF) FOR DEAD PLUS SUSTAINED LIVE LOADS AND 3,300 PSF FOR TOTAL LOADS INCLUDING WIND OR SEISMIC FORCES.

   B. LATERAL EARTH PRESSURE (UNO):
   SURCHARGE: HIGHER OR EQUIVALENT TO 2 FEET (FOR C.I.P. RETAINING WALLS ONLY) OF SOIL ABOVE FINISHED GRADE.

	STATIC	SEISMIC
ACTIVE (PSF/FT):	95	10H *(PSF/FT, ADDITIVE TO ACTIVE PRESSURE)
PASSIVE (PSF/FT):	350	
SLIDING COEFFICIENT OF FRICTION:	0.35	

   * WHERE H IS HEIGHT OF THE RETAINING WALL

TYPICAL STRUCTURAL MATERIALS:

1. MATERIALS SHALL CONFORM TO THE FOLLOWING REQUIREMENTS UNLESS OTHERWISE INDICATED ON THE DRAWINGS.

2. SEE PROJECT SPECIFICATIONS AND NOTES ON DRAWINGS OF SPECIFIC STRUCTURES FOR DETAILED AND LOCATION-SPECIFIC REQUIREMENTS.

REINFORCING STEEL (FOR CONCRETE AND MASONRY):

1. DEFORMED BARS:
   A. TYPICAL: ASTM A 615, GRADE 60.
   B. WHERE INDICATED ON THE DRAWINGS: ASTM A 706.

2. WELDED WIRE FABRIC: ASTM A 185.

3. HORIZ JOINT REINF (FOR MASONRY: ASTM A 951, 3/16"DIA x 2 RODS), GALV.

CONCRETE:

1. NORMAL DENSITY.

2. MINIMUM SPECIFIED CONCRETE COMPRESSIVE STRENGTH, f'c (AT 28 DAYS UNO).

   A. STRUCTURES: "CLASS A"OR "CLASS B" f'c = 4500 PSI.
   FOR DRILLED PIERS: "CLASS B" f'c = 5000 PSI
   B. FILL AND THRUST BLOCKS: "CLASS C" f'c = 2500 PSI.
   C. PIPE ENCASEMENT: "CLASS A" f'c = 4500 PSI.
   D. ELECTRICAL DUCT ENCASEMENT: "CLASS CE" f'c = 2500 PSI.

   2

MASONRY:

1. CONCRETE MASONRY

   A. UNITS: ASTM C 90, NORMAL WEIGHT.
   B. MORTAR: ASTM C 270, MINIMUM 28-DAY COMPRESSIVE STRENGTH = 2000 PSI.
   C. GROUT: ASTM C 476. MINIMUM 28-DAY COMPRESSIVE STRENGTH = 2000 PSI.

   D. MINIMUM SPECIFIED COMPRESSIVE STRENGTH, f'm (AT 28 DAYS).
      1) SOLID GROUTED: f'm = 2000 PSI.
      2) PARTIALLY GROUTED: f'm = 2000 PSI.

STRUCTURAL STEEL:

1. SECTIONS

   A. SHAPES W, WT: ASTM A 992 (Fy = 50 KSI)
   B. SHAPES S, ST, M, MT, HP, C, MC, L: ASTM A 36 (Fy = 36 KSI)
   C. PLATES AND BARS: ASTM A 36 (Fy = 36 KSI)
   D. PIPES: ASTM A 53, GRADE B (Fy = 35 KSI)
   E. HOLLOW STRUCTURAL SECTIONS:
      ROUND: ASTM A 500, GRADE B (Fy = 42 KSI)
      SQUARE AND RECTANGULAR: ASTM A 500, GRADE B (Fy = 46 KSI)

2. CONNECTIONS:

   A. BOLTS - STEEL TO-STEEL:
      ASTM A 325 HIGH-STRENGTH BOLTS, WITH LOAD INDICATOR WASHERS.
   B. BOLTS - STEEL TO CONCRETE OR MASONRY:
      ANCHOR BOLTS WITH HEX FORGED HEAD.
      ASTM A193, STAINLESS TYPE 316
      ASTM F 1554, GRADE 36 (SEE DRAWINGS) GALVANIZED.
   C. WELDS - SHIELDED METAL ARC PROCESS USING E70-XX ELECTRODES.

STAINLESS STEEL:

1. ANSI TYPE 316/316L EXCEPT WHERE TYPE 304/304L IS INDICATED ON THE DRAWINGS.

2. SECTIONS: SHAPES AND BARS: ASTM A 276.

3. BOLTED CONNECTIONS - BOLTS AND ANCHOR BOLTS:

   A. MATCH ALLOY OF THE STRUCTURAL MEMBERS CONNECTED.
   B. TYPE 316/316L: ASTM A 193, GRADE B8M, CLASS 1, HEAVY HEX.
   C. TYPE 304/304L: ASTM A 193, GRADE B8, CLASS 1, HEAVY HEX.

4. WELDED CONNECTIONS:

   A. TYPE 316L: E316L-15 ELECTRODES.
   B. TYPE 304L: E304L-15 ELECTRODES.

STRUCTURAL ALUMINUM:

1. SECTIONS

   A. SHAPES: ASTM B 308, ALLOY 6061-T6.
   B. SHEET AND PLATE: ASTM B 209, ALLOY 6061-T6.

2. BOLTED CONNECTIONS - BOLTS AND ANCHOR BOLTS:

   A. STAINLESS STEEL - TYPE 316, ASTM A 193, GRADE B8M, CLASS 1, HEAVY HEX.

3. WELDED CONNECTIONS:

   A. GAS METAL ARC (MIG) OR GAS TUNGSTEN ARC (TIG) PROCESS USING FILLER ALLOY 4043 ELECTRODES.

CONSTRUCTION:

CONFORM TO THE FOLLOWING REQUIREMENTS UNLESS OTHERWISE INDICATED ON THE DRAWINGS.

EXCAVATION AND BACKFILLING:

1. EXPOSE AND PREPARE SUBGRADE AS SHOWN ON THE DRAWINGS AND SPECIFIED. OBTAIN ENGINEER'S OBSERVATION OF SUBGRADE SURFACES, AS EXPOSED AND AS PREPARED, BEFORE PROCEEDING WITH FOUNDATION CONSTRUCTION.

2. DO NOT PLACE BACKFILL AGAINST WALLS UNTIL STRUCTURES SUPPORTING THE TOP OF THE WALL ARE IN PLACE, ARE COMPLETE, AND (IN THE CASE OF CONCRETE) HAVE CURED TO THEIR MINIMUM SPECIFIED 28-DAY COMPRESSIVE STRENGTH.

3. WHERE BACKFILL MUST BE PLACED AGAINST WALLS BEFORE STRUCTURES ABOVE ARE COMPLETE, PROVIDE BRACING FOR WALLS. KEEP BRACING IN PLACE UNTIL THE STRUCTURE ABOVE IS COMPLETE AND (IN THE CASE OF CONCRETE) HAS CURED TO ITS MINIMUM SPECIFIED 28-DAY COMPRESSIVE STRENGTH.

CONCRETE:

1. SEE S101/TYP FOR CONCRETE NOTES, INCLUDING CLEAR COVER AND LAP SPLICE LENGTH REQUIREMENTS FOR REINFORCING.

2. SUBMIT LOCATIONS OF CONSTRUCTION JOINTS NOT SHOWN ON THE DRAWINGS FOR ACCEPTANCE BY THE ENGINEER BEFORE FORM LAYOUT.

3. PROVIDE CHAMFER AT EXPOSED EDGES OF CAST-IN-PLACE CONCRETE. SEE SPECIFICATION 03102 FOR CHAMFERS.

4. PROVIDE REINFORCING:

   A. AT CORNERS AND JUNCTIONS - AS INDICATED IN S144/TYP, SUPPLEMENT WITH ADDED BARS WHERE INDICATED ON THE DRAWINGS.
   B. AT OPENINGS - AS INDICATED IN S180/TYP.

5. WELDING OF REINFORCING IS NOT PERMITTED UNLESS DETAILED ON THE DRAWINGS OR ACCEPTED IN ADVANCE BY THE ENGINEER.

6. MAINTAIN MINIMUM 3 INCHES CLEAR CONCRETE COVER BETWEEN REINFORCING AND EMBEDMENTS.

7. FINISH CONCRETE AS SPECIFIED IN SECTION 03366.

8. CONCRETE PADS

   A. (E) EQUIPMENT PAD SEE S302/TYP.

   B. (H) HOUSEKEEPING PAD FOR ELECTRICAL EQUIPMENT SEE S350/TYP.

MASONRY:

1. SEE S400/TYP FOR MASONRY NOTES, INCLUDING LAP SPLICE LENGTHS.

2. PROVIDE REINFORCING:

   A. AT CORNERS AND JUNCTIONS AS INDICATED IN S412/TYP.
   B. AT OPENINGS AS INDICATED IN S410/TYP.

3. WELDING OF REINFORCING IS NOT PERMITTED UNLESS DETAILED ON THE DRAWINGS OR ACCEPTED IN ADVANCE BY THE ENGINEER.

4. GROUTING:

   A. FULLY GROUTED.

STEEL, STAINLESS STEEL, AND ALUMINUM - CONNECTIONS:

1. BOLTED:

   A. MADE USING 3/4-INCH DIAMETER BOLTS.
   B. HAVING A MINIMUM OF 2 BOLTS, SPACED NOT CLOSER THAN 3 INCHES ON CENTER.
   C. WITH A DISTANCE OF AT LEAST 1 1/2 INCHES FROM CENTER OF BOLT TO ANY EDGE OF A PLATE OR STRUCTURAL ELEMENT.

2. WELDED:

   A. FILLET WELDS: PER AWS CODE BASED ON THE THICKNESS OF THE MATERIALS BEING JOINED, AND FULL LENGTH OF THE JOINT.

3. INTERFACE BETWEEN MATERIALS:

   A. AT BOLTED CONNECTIONS THAT INCLUDE DIFFERENT METALS (E.G.: STEEL AND STAINLESS STEEL, OR ALUMINUM AND STAINLESS STEEL) PROVIDE ISOLATING SLEEVES AND WASHERS AS SPECIFIED IN SECTION 05190.
   B. WHERE ALUMINUM IS IN CONTACT WITH MASONRY OR CONCRETE, COAT ALUMINUM SURFACES AS SPECIFIED IN SECTION 09960.

4. POST-INSTALLED ANCHORS IN CONCRETE AND MASONRY:

   A. INSTALL IN FULL COMPLIANCE WITH ACCEPTED BUILDING CODE EVALUATION REPORT AND MANUFACTURER'S INSTRUCTIONS.
   B. DO NOT CUT, DAMAGE, OR INTERRUPT EXISTING REINFORCEMENT TO INSTALL ANCHORS. USE NON-DESTRUCTIVE TESTING EQUIPMENT TO IDENTIFY LOCATIONS OF REINFORCEMENT IN MEMBERS BEFORE DRILLING HOLES FOR ANCHORS.

METAL FABRICATIONS:

1. HANDRAILS AND GUARDRAILS:

   A. ALUMINUM, EXCEPT WHERE OTHER MATERIALS ARE NOTED.

2. GRATING:

   A. ALUMINUM WITH TYPE 316 STAINLESS STEEL FASTENERS, UNLESS OTHERWISE NOTED.
   B. GRATING AND ITS SEATS OR SUPPORTS SHALL BE OF THE SAME MATERIAL.
   C. UNLESS INDICATED ON THE DRAWINGS AS "REMOVABLE GRATING", SECURELY FASTEN GRATING TO SUPPORTS AS INDICATED IN S544/TYP.

3. COVER PLATES:

   A. ALUMINUM WITH TYPE 316 STAINLESS STEEL FASTENERS, UNLESS OTHERWISE NOTED.
   B. COVER PLATE AND ITS SEATS OR SUPPORTS SHALL BE OF THE SAME MATERIAL.

SPECIAL INSPECTION:

1. SPECIAL INSPECTION IS REQUIRED FOR THE FOLLOWING STRUCTURAL MATERIALS AND CONSTRUCTION. SEE SPECIFICATION SECTION 01455 FOR DETAILS.

2. DIVISION 2 SITE CONSTRUCTION (EARTHWORK)

   A. EXCAVATION DEPTH.
   B. ADEQUACY OF EXPOSED SURFACE TO PROVIDE REQUIRED SUPPORT.
   C. PREPARATION OF SOILS/SURFACES SUPPORTING CONSTRUCTION.
   D. FILL AND BACKFILL.
   E. DRILLED PIERS.

3. DIVISION 3 CONCRETE:

   A. LOCATIONS.
   B. FORMWORK AND MEMBER SIZES.
   C. REINFORCING STEEL.
   D. ANCHORS: CAST-IN AND POST-INSTALLED.
   E. CONCRETE MIX AND PLACEMENT.
   F. PROTECTION AND CURING PROCEDURES.

4. DIVISION 4 MASONRY

   A. LOCATIONS.
   B. MEMBER SIZES.
   C. REINFORCING STEEL.
   D. ANCHORS: BUILT-IN AND POST-INSTALLED.
   E. MORTAR AND JOINTS.
   F. GROUT AND GROUTING.
   G. PROTECTION AND CURING PROCEDURES.

5. DIVISION 5 METALS

   A. GENERAL ALL METALS:
      1) MEMBER LOCATIONS.
      2) MEMBER SIZES/TYPES.
      3) ANCHORS - CAST-IN AND BUILT-IN ANCHOR BOLTS.
      4) ANCHORS - POST-INSTALLED MECHANICAL AND ADHESIVE.

   B. STRUCTURAL STEEL (CARBON AND STAINLESS).
      1) HIGH-STRENGTH BOLTING.
      2) WELDING.

   C. STRUCTURAL ALUMINUM.
      1) BOLTING.
      2) WELDING.

   D. STEEL JOISTS AND JOIST GIRDERS.
      1) CONNECTIONS.
      2) BRACING.

   E. STEEL DECKING.
      1) CONNECTIONS TO SUPPORTS.
      2) SIDE CONNECTIONS BETWEEN ADJACENT SHEETS.

   F. COLD-FORMED STEEL LIGHT-FRAME CONSTRUCTION.

6. DIVISION 6 WOOD, PLASTICS AND COMPOSITES.

STRUCTURAL OBSERVATION:

1. STRUCTURAL OBSERVATION IS REQUIRED DURING AND AT SPECIFIC STAGES OF CONSTRUCTION. SEE SPECIFICATION SECTION 01455 FOR DETAILS.

STEEL JOISTS: 1

1. ALL OPEN WEB JOIST AND JOIST GIRDERS SHALL BE FABRICATED, FURNISHED, AND ERECTED IN ACCORDANCE WITH THE STEEL JOIST INSTITUTE'S STANDARD SPECIFICATIONS FOR OPEN WEB STEEL JOISTS, LATEST EDITION.

2. THE DESIGN OF ALL STEEL JOIST AND JOIST GIRDERS SHALL BE BY THE MANUFACTURER'S ENGINEER. ALL JOIST AND JOIST GIRDERS ALONG WITH THE BRIDGING SHALL BE DESIGNED FOR THE GRAVITY LOADS OF THE PROJECT IN ADDITION TO THE WIND AND SEISMIC LOADS SHOWN ON THE STRUCTURAL DRAWINGS AND THE MECHANICAL LOADS SHOWN ON THE MECHANICAL DRAWINGS.

3. BEARING LENGTH SHALL BE IN ACCORDANCE WITH STEEL JOIST INSTITUTE'S STANDARD SPECIFICATIONS BEARING PLATES AND ANGLES SHALL BE ADJUSTED TO PROVIDE LEVEL BEARING ON SUPPORT SURFACE.

4. SHOP DRAWINGS SHALL BE SUBMITTED COMPLETELY DETAILING THE JOISTS FOR ERECTION. INCLUDE ALL BRIDGING AND CONNECTIONS. CALCULATIONS AND SHOP DRAWINGS SHALL BE SIGNED, SEALED, AND DATED BY A STRUCTURAL ENGINEER REGISTERED IN THE STATE OF THE PROJECT.

5. PROVIDE A SHOP COAT OF STANDARD PRIMER PAINT. COLOR TO BE SPECIFIED BY THE OWNER. PRIMER TO BE COMPATIBLE WITH FINISH COAT WHERE APPLICABLE. TOUCH UP DAMAGED AREAS WITH SAME PAINT USED FOR SHOP COAT.

STRUCTURAL SYMBOLS:

1. SEE SHEET 00G06 FOR KEY TO DRAWING TITLES AND SECTION CUTS, AND FOR DEFINITION OF MATERIALS SHADING PATTERNS.

2. WELDING: SYMBOLS: IN ACCORDANCE WITH AMERICAN WELDING SOCIETY (AWS) A2.4.

STRUCTURAL ABBREVIATIONS:

1. SEE SHEET 00G05 FOR GENERAL LIST OF ABBREVIATIONS USED ON DRAWINGS.

2. ABBREVIATIONS FOR NAMES OF TECHNICAL GROUPS MAY BE FOUND IN THE PROJECT SPECIFICATIONS.

3. STRUCTURAL MEMBERS:

   A. STEEL: ABBREVIATIONS AND DESIGNATIONS ARE IN ACCORDANCE WITH THE AMERICAN INSTITUTE OF STEEL CONSTRUCTION'S STEEL CONSTRUCTION MANUAL, CURRENT EDITION.

   B. ALUMINUM: ABBREVIATIONS AND DESIGNATIONS ARE IN ACCORDANCE WITH THE ALUMINUM ASSOCIATION'S ALUMINUM DESIGN MANUAL, CURRENT EDITION.

4. ABBREVIATIONS FOR STRUCTURAL DRAWINGS:
   WHEN USED ON THE STRUCTURAL DRAWINGS, THE FOLLOWING ABBREVIATIONS HAVE THE MEANINGS LISTED.

REINFORCEMENT:		OTHER:	
BO	BOTTOM OF	L	ANGLE
EF	EACH FACE	PL	PLATE
I.F.	INSIDE FACE		
O.F.	OUTSIDE FACE		
T.O.	TOP OF		
#	NUMBER (REINFORCING BAR SIZE)		

DEFERRED DESIGN SUBMITTALS

AS DEFINED IN THE BUILDING CODE, DEFERRED DESIGN SUBMITTALS ARE PORTIONS OF THE DESIGN THAT ARE NOT SUBMITTED AT THE TIME OF PERMIT APPLICATION, AND THAT ARE TO BE REVIEWED BY THE REGISTERED DESIGN PROFESSIONAL AND SUBSEQUENTLY SUBMITTED TO THE BUILDING OFFICIAL.

DEFERRED DESIGN SUBMITTALS FOR THIS PROJECT INCLUDE:

1. DIVISION 2 SITE CONSTRUCTION (EARTHWORK).

   A. 02300 EARTH WORK
   B. 2665 SOIL NAIL WALL
   C. 02338 EARTH RETAINING WALLS
   D. COFFERDAMS - SECTION 02670

2. DIVISION 5 METALS.
   A. 05500 HANDRAILS AND GUARDRAILS.
   B. 05500 GRATING

   2

3. DIVISION 15 MECHANICAL.

   A. 15050 MECHANICAL EQUIPMENT ANCHORAGE

4. LIFTING EYES: SUBMIT DETAILS WITH CALCULATIONS DEMONSTRATING THE SPECIFIED LOAD CAPACITY TO ENGINEER. DELIVER REMOVABLE EYES TO OWNER AFTER INSTALLATION OF REMOVABLE PANELS.

REV	DATE	BY	DESCRIPTION
2	11-19-20	KP	REVISED PER ADDENDUM NO. 6
1	11-04-20	KP	REVISED PER ADDENDUM NO. 3

DESIGNED CE
DRAWN CE
CHECKED MD
DATE SEPTEMBER 2020

REGISTERED PROFESSIONAL ENGINEER KAUSHIK V. PUNYAMURTULA No. 83261 CIVIL STATE OF CALIFORNIA

carollo

ANTIOCH CALIFORNIA OPPORTUNITY LIVES·HERE

CITY OF ANTIOCH
ANTIOCH BRACKISH WATER DESALINATION PROJECT
GENERAL
GENERAL STRUCTURAL NOTES

VERIFY SCALES
BAR IS ONE INCH ON ORIGINAL DRAWING
0 1"
IF NOT ONE INCH ON THIS SHEET, ADJUST SCALES ACCORDINGLY

JOB NO. 10024A.10
DRAWING NO. G10
SHEET NO. 10 OF 498

LAST SAVED BY: tumadhay
Model: Layout1 ColorTable: gshade.ctb DesignScript: Carollo_Std_Pen_v0905.pen PlotScale: 1:1 User: svcPW Plot Date: 19-NOV-2020 9:36:17 AM

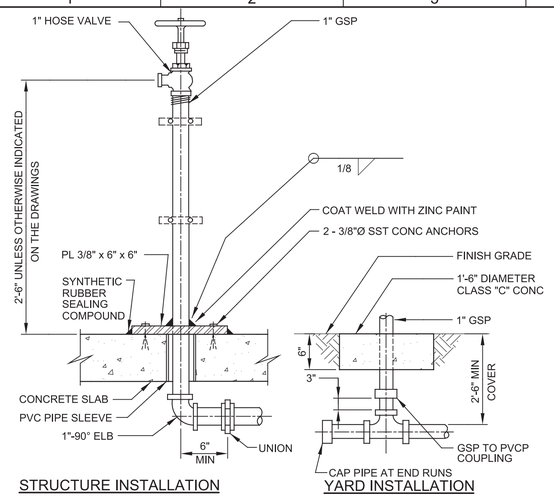

NOTES:

1. SIGN SHALL BE 3/8" THICK PLASTIC RESISTANT TO SUNLIGHT (ULTRAVIOLET) DETERIORATION.
2. SIGN SHALL BE 7" x 10" AND SHALL CONFORM TO THE SPECIFICATIONS.
3. SIGN AS SHOWN IS ROTATED 90° OFF TRUE POSITION. SIGN SHALL BE MOUNTED TO PERMIT EASY READING.
4. INSTALL HOSE RACK M280 TYP AT EACH HOSE VALVE.

M276 TYP — 1" HOSE VALVE AND SIGN

R 06/30/20

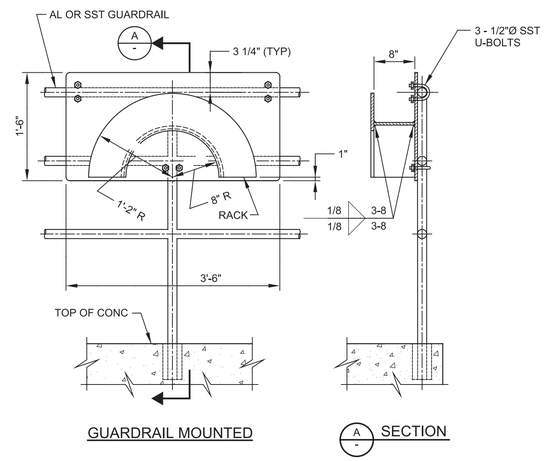

NOTES:

1. HOSE RACK SHALL BE FABRICATED FROM 3/16" ALUMINUM PLATE. ROUND ALL EDGES SMOOTH.
2. HOSE RACKS INSTALLED IN YARD LOCATIONS SHALL BE FREESTANDING. EMBED IN A 4'-6" LONG x 2'-0" WIDE x 8" DEEP CONCRETE PAD WITH #5@12" EW CENTERED.
3. WALL MOUNTED HOSE RACKS ON MASONRY WALL SHALL BE FASTEN TO GROUTED CELLS.

M280 TYP — HOSE RACK

S SHEET 1 OF 2 09/30/07

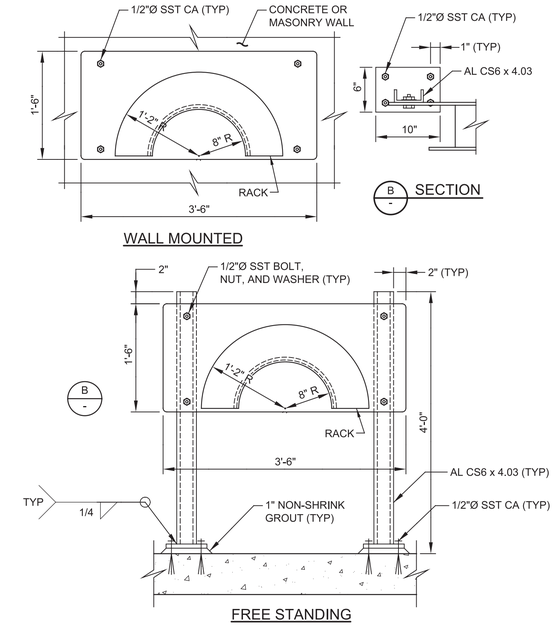

M280 TYP — HOSE RACK

S SHEET 2 OF 2 09/30/07

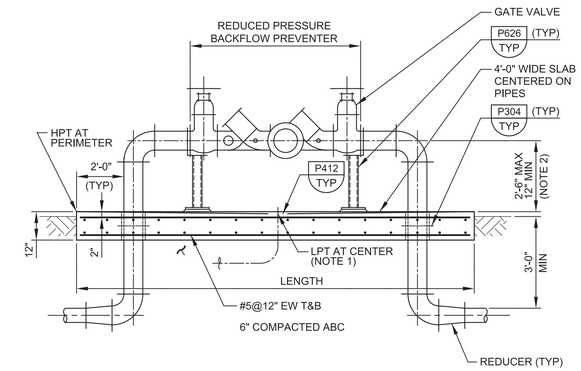

MK	SIZE
1	4"

NOTES:

1. SLAB LOW POINT AT DRAIN (LPT) EQUALS HIGH POINT ELEVATION AT PERIMETER (HPT) MINUS 2" UNO.
2. IF LOCATED IN A CONTAINMENT AREA, THIS DIMENSION SHALL BE FROM THE TOP OF CONTAINMENT WALL.

M310 TYP — REDUCED PRESSURE DOUBLE BACKFLOW PREVENTER

08/21/19

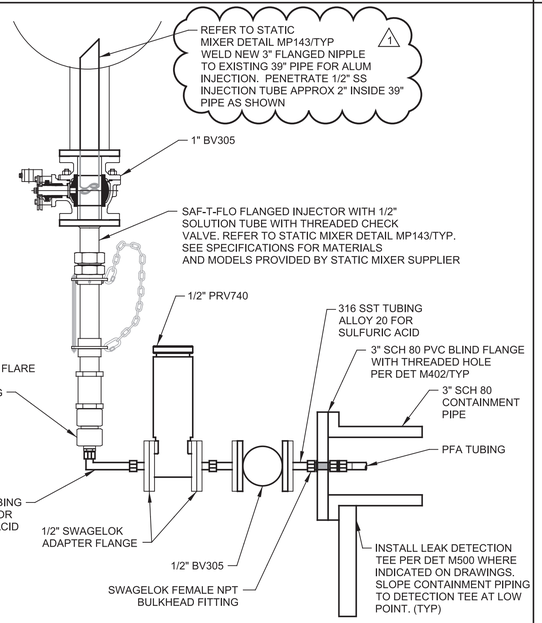

M400 TYP — CHEMICAL INJECTION PIPING PFA TO SST TUBING TRANSITION - DETAIL

J 04/10/20

KEY NOTES:

1. USE LONG SWEEP/LONG RADIUS ELBOWS WITH THE DOUBLE CONTAINMENT PIPING.

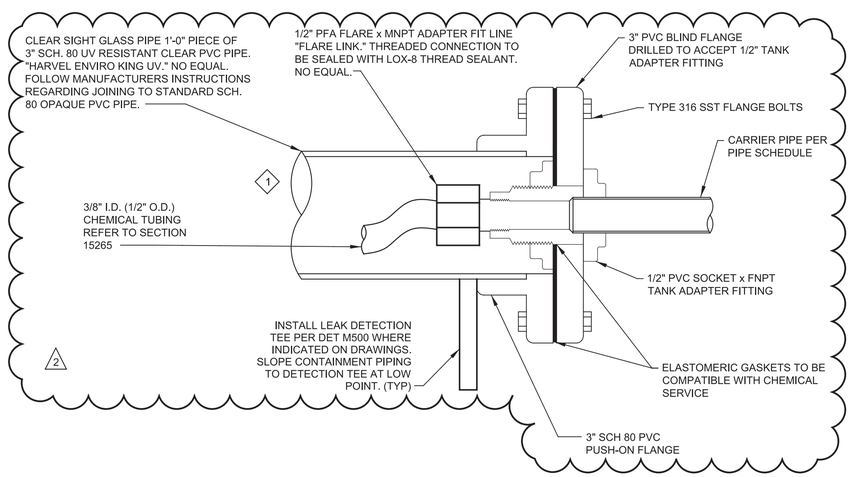

M402 TYP — DETAIL - TRANSITION TO/FROM DOUBLE CONTAINMENT

J 04/10/20

REV	DATE	BY	DESCRIPTION
2	11-19-20	KCF	REVISED PER ADDENDUM NO. 6
1	11-04-20	JES	REVISED PER ADDENDUM NO. 3

DESIGNED CE
DRAWN CE
CHECKED MZ
DATE SEPTEMBER 2020

Digitally signed by Scott C. Weddle
Contact Info: Carollo Engineers, Inc.
Date: 2020.11.19 10:24:28-08'00'

REGISTERED PROFESSIONAL ENGINEER SCOTT CLARK WEDDLE No. 49851 CIVIL STATE OF CALIFORNIA

carollo®

ANTIOCH CALIFORNIA OPPORTUNITY LIVES·HERE

CITY OF ANTIOCH
ANTIOCH BRACKISH WATER DESALINATION PROJECT
TYPICALS
TYPICAL DETAILS MECHANICAL 1

VERIFY SCALES
BAR IS ONE INCH ON ORIGINAL DRAWING
0 1"
IF NOT ONE INCH ON THIS SHEET, ADJUST SCALES ACCORDINGLY

JOB NO. 10024A.10
DRAWING NO. TM01
SHEET NO. 54 OF 498

Plot Date: 18-NOV-2020 9:29:23 AM
User: svcPW
PlotScale: 1:1
DesignScript: Carollo_Std_Pen_v0905.pen
ColorTable: gshade.ctb
Model: Layout1
LAST SAVED BY: gleal

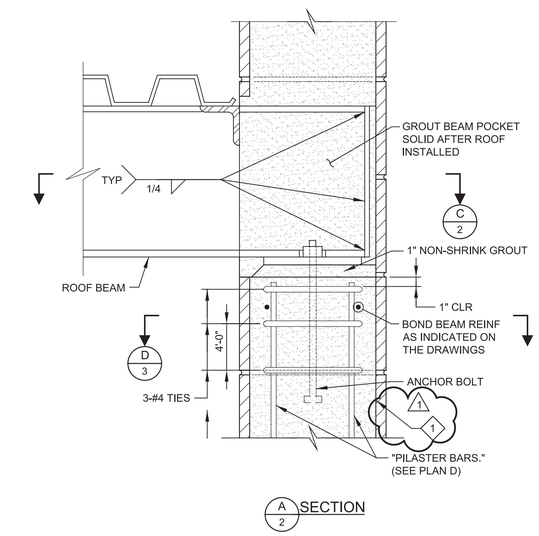

S451 TYP — 12" CMU WALL ROOF BEAM TO EXTERIOR WALL CONNECTION

NS SHEET 1 OF 3 08/18/15

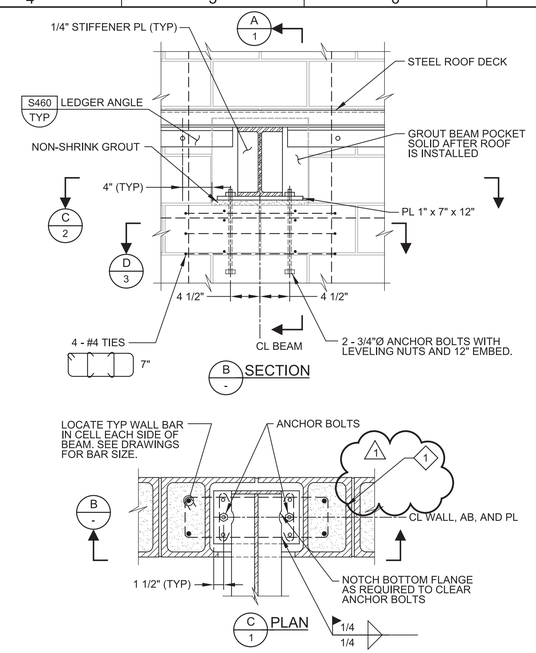

S451 TYP — 12" CMU WALL ROOF BEAM TO EXTERIOR WALL CONNECTION

NS SHEET 2 OF 3 08/18/15

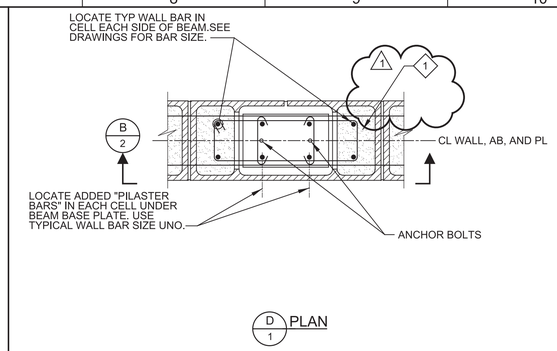

KEY NOTES: 1

1. FOR MEZZANINE SUPPORT STRUCTURE INSIDE RO BUILDING, REFER TO DRAWING 25S14 FOR MODIFICATIONS TO MASONRY WALL AT BEAM ANCHORAGE AND WALL. THIS MODIFICATION IS APPLICABLE ON BOTH WALLS THAT SUPPORT THE COMPOSITE SLAB BEAM.

S451 TYP — 12" CMU WALL ROOF BEAM TO EXTERIOR WALL CONNECTION

NS SHEET 3 OF 3 08/18/15

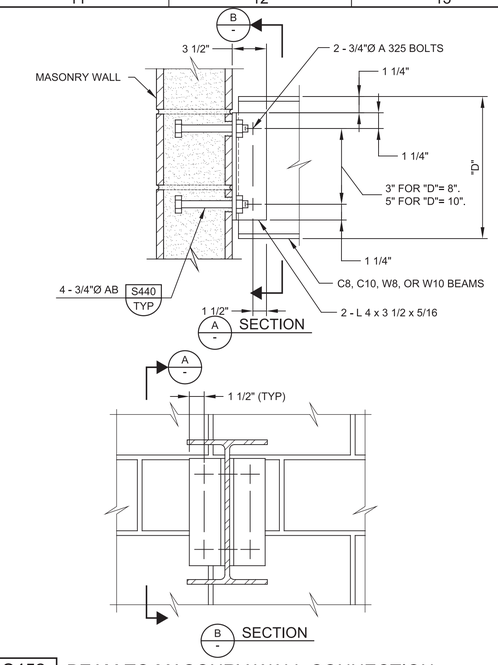

S452 TYP — BEAM TO MASONRY WALL CONNECTION

N 08/01/05

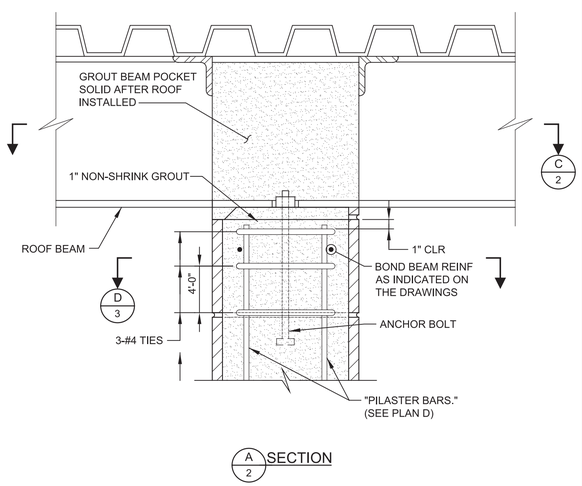

S453 TYP — 12" CMU WALL ROOF BEAM CONNECTION AT INTERIOR WALL

J SHEET 1 OF 3 02/19/20

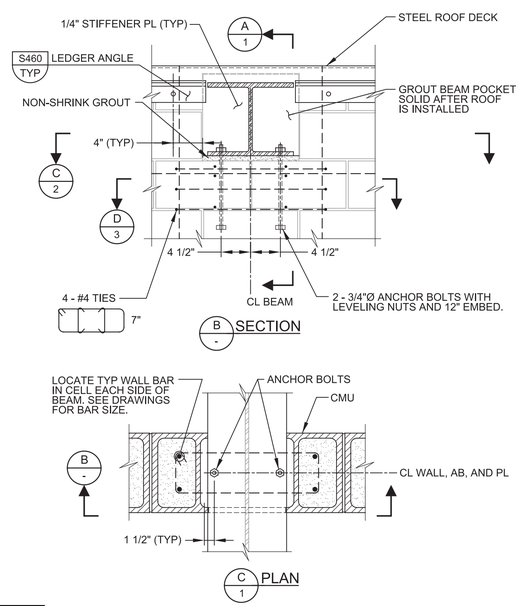

S453 TYP — 12" CMU WALL ROOF BEAM CONNECTION

J SHEET 2 OF 3 06/02/20

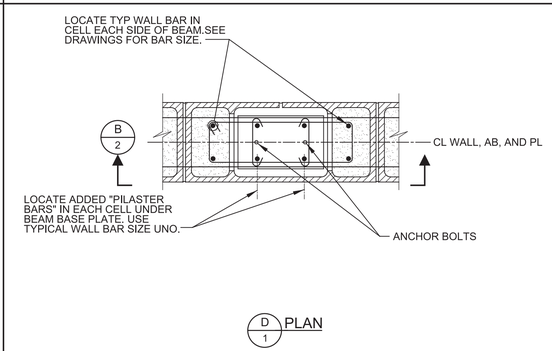

S453 TYP — 12" CMU WALL ROOF BEAM CONNECTION

J SHEET 3 OF 3 06/02/20

REV	DATE	BY	DESCRIPTION
1	11-19-20	KP	REVISED PER ADDENDUM NO. 6

DESIGNED CE
DRAWN CE
CHECKED MD
DATE SEPTEMBER 2020

Kaushik V. Punyamurtula

REGISTERED PROFESSIONAL ENGINEER KAUSHIK V. PUNYAMURTULA No. 83261 CIVIL STATE OF CALIFORNIA

carollo

ANTIOCH CALIFORNIA OPPORTUNITY LIVES·HERE

CITY OF ANTIOCH

ANTIOCH BRACKISH WATER DESALINATION PROJECT

TYPICALS

TYPICAL DETAILS STRUCTURAL 8

VERIFY SCALES
BAR IS ONE INCH ON ORIGINAL DRAWING
0 1"
IF NOT ONE INCH ON THIS SHEET, ADJUST SCALES ACCORDINGLY

JOB NO. 10024A.10
DRAWING NO. TS08
SHEET NO. 78 OF 498

Model: Layout1 ColorTable: gshade.ctb DesignScript: Carollo_Std_Pen_v0905.pen PlotScale: 1:1 User: svcPW Plot Date: 19-NOV-2020 11:50:31 AM LAST SAVED BY: gleal

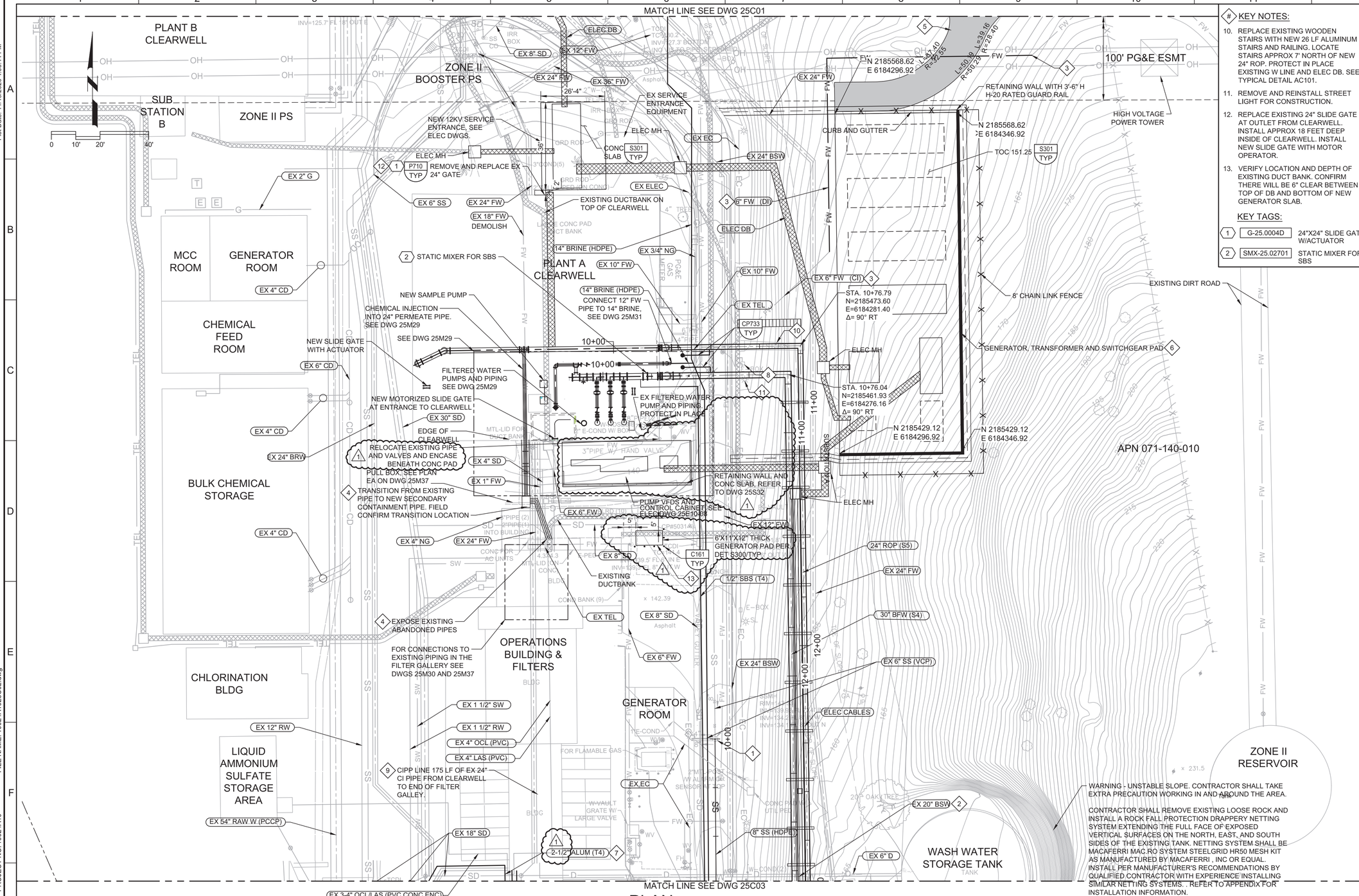

PLAN

SCALE: 1"=20'
FILE: Proj_Num_01C100

KEY NOTES:

10. REPLACE EXISTING WOODEN STAIRS WITH NEW 26 LF ALUMINUM STAIRS AND RAILING. LOCATE STAIRS APPROX 7' NORTH OF NEW 24" ROP. PROTECT IN PLACE EXISTING W LINE AND ELEC DB. SEE TYPICAL DETAIL AC101.
11. REMOVE AND REINSTALL STREET LIGHT FOR CONSTRUCTION.
12. REPLACE EXISTING 24" SLIDE GATE AT OUTLET FROM CLEARWELL. INSTALL APPROX 18 FEET DEEP INSIDE OF CLEARWELL. INSTALL NEW SLIDE GATE WITH MOTOR OPERATOR.
13. VERIFY LOCATION AND DEPTH OF EXISTING DUCT BANK. CONFIRM THERE WILL BE 6" CLEAR BETWEEN TOP OF DB AND BOTTOM OF NEW GENERATOR SLAB.

KEY TAGS:

1	G-25.0004D	24"X24" SLIDE GATE W/ACTUATOR
2	SMX-25.02701	STATIC MIXER FOR SBS

GENERAL NOTES:

1. SEE DWG G05 FOR GENERAL NOTES AND PIPELINE NOTES.
2. SEE DWG 25C12 FOR 24" ROP AND 8" SS PROFILES; DWG 25C13 FOR 30" BFW PROFILE; AND P42 FOR 14" BRINE PROFILE.
3. ALL CHEMICAL PIPING SHALL BE DOUBLE CONTAINED PIPE PER PIPE SCHEDULE ON DWGS G18 & G19. INSTALL WITH 3' MIN COVER PER CP111 WITH CLSM BEDDING UNO.

KEY NOTES:

1. CONNECT 8" SS TO EX SSMH WITH INV 134.2. CORE DRILL HOLE PIPE OD + 2" MAX. INSTALL 8" X 1' STUB INTO HOLE AND SEAL ANNULAR SPACE WITH NON-SHRINK GROUT.
2. 20" BSW HAS NO ISOLATION VALVE. BREAKAGE OF PIPE WOULD EMPTY WASH WATER STORAGE TANK INTO WTP AND CAUSE SEVERE DAMAGE.
3. REMOVE EXISTING 6" FW PIPE AS REQ'D FOR NEW GENERATOR PAD CONSTRUCTION AS SHOWN ON 25D01. INSTALL NEW 6" FW. AND CONNECT TO EXISTING 6" FW IN 2 LOCATIONS WITH FITTINGS AND ADAPTORS AS REQUIRED. EXISTING FW ALIGNMENT AND CONNECTION POINTS SHOWN ARE APPROXIMATE AND SHALL BE VERIFIED BY CONTRACTOR PRIOR TO CONSTRUCTION. REFER TO SECTION 01140 FOR SHUTDOWN RESTRICTIONS.
4. WARNING: EXISTING FLUORIDE AND SODIUM HYDROXIDE PIPES ARE FULL OF CHEMICAL. COORDINATE ISOLATION AND DEPRESSURIZATION WITH PLANT STAFF PRIOR TO CONDUCTING WORK ON PIPES. PROPER PPE IS MANDATORY.
5. RIP AND RE-COMPACT SUBGRADE. INSTALL NEW 12' WIDE AC ROAD (3" AC WITH 12" AB COMPACTED TO 95% RELATIVE DENSITY).
6. SEE STRUCTURAL DWGS FOR SLAB AND SOIL NAIL RETAINING WALL DETAILS. SEE ELECTRICAL DWGS FOR EQUIPMENT DETAILS.
7. MOUNT NEW PIPE ON TOP OF BASIN. SEE DWG 25C19 PHOTO #3.
8. REMOVE AND REPLACE EX ELEC CONDUIT AND BOX AS REQUIRED FOR CONSTRUCTION.
9. LINE WITH WARREN ENVIRONMENTAL 301-01 SPIN CAST LINER (125 MIL MIN) WITH SURFACE PREP AS RECOMMENDED BY MANUFACTURER. ASSUME TWO OFFSET JOINT REPAIRS USING RAUSH COUPLING FOR BID. ACCESS EX PIPE FROM INSIDE CLEARWELL. REMOVE EXISTING CHEM INJECTION LINES THAT PROTRUDE INTO PIPE, PLUG EX PIPES TO FILTERS, AND CCTV PRIOR TO LINING TO IDENTIFY CONDITION OF PIPE. AFTER LINING IS COMPLETE, REINSTATE CHEM FEED PIPES, UNPLUG EX PIPES TO FILTERS, AND CCTV PIPE TO VERIFY CONDITION. REPLACE CONC BACKFILL AND FLOOR TO EX CONDITIONS.

Call before you Dig
Avoid cutting underground utility lines. It's costly.
Call 811

KEY MAP

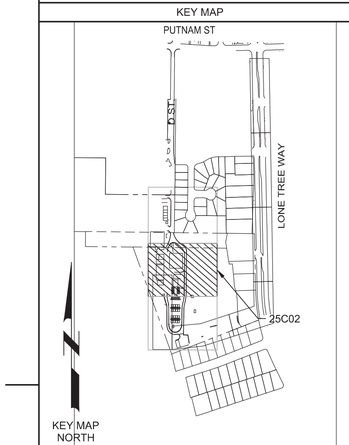

REV	DATE	BY	DESCRIPTION
1	11/19/2020	SW	REVISED PER ADDENDUM #6

DESIGNED JES
DRAWN ART
CHECKED JM
DATE SEPTEMBER 2020

Digitally signed by Jill E. Shankel
Contact Info: Carollo Engineers, Inc.
Date: 2020.11.19 17:07:38-08'00'

REGISTERED PROFESSIONAL ENGINEER JILL E. SHANKEL No. 54604 CIVIL STATE OF CALIFORNIA

carollo

ANTIOCH CALIFORNIA OPPORTUNITY LIVES·HERE

CITY OF ANTIOCH
ANTIOCH BRACKISH WATER DESALINATION PROJECT
CIVIL
WATER TREATMENT PLANT YARD PIPING - 2

VERIFY SCALES
BAR IS ONE INCH ON ORIGINAL DRAWING
0 1"
IF NOT ONE INCH ON THIS SHEET, ADJUST SCALES ACCORDINGLY

JOB NO. 10024A.10
DRAWING NO. 25C02
SHEET NO. 100 OF 498

Plot Date: 11/19/2020 4:06:44 PM
FILE NAME: 10024A1025C02.dwg
PROJECT NO. 10024A10
LAST SAVED BY: tdonnell

Plot Date: 11/19/2020 4:29:47 PM

KEY TAGS:

1	SMX 21.0601A	39" STATIC MIXER
2	SMX 21.0601B	30" STATIC MIXER
3	FE 21.0063	18" MAGNETIC FLOW METER
4	BFP XX.XXXX	4" BACK FLOW PREVENTER

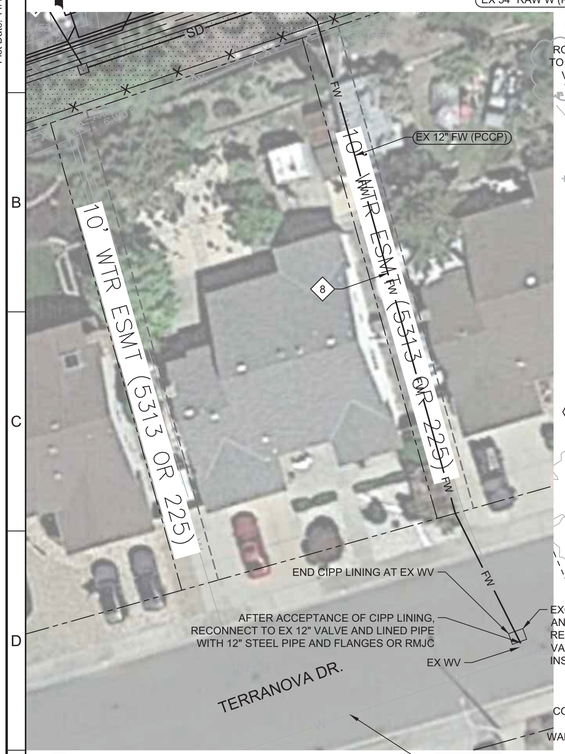

2 12" FW CIPP WORK

SCALE: 1"=20'
FILE: PHOTO FOR C02 RW PIPING

1 SEDIMENTION BASIN AT ABOVE GROUND 12" RW

SCALE: NONE
FILE: PHOTO FOR C02 RW PIPING

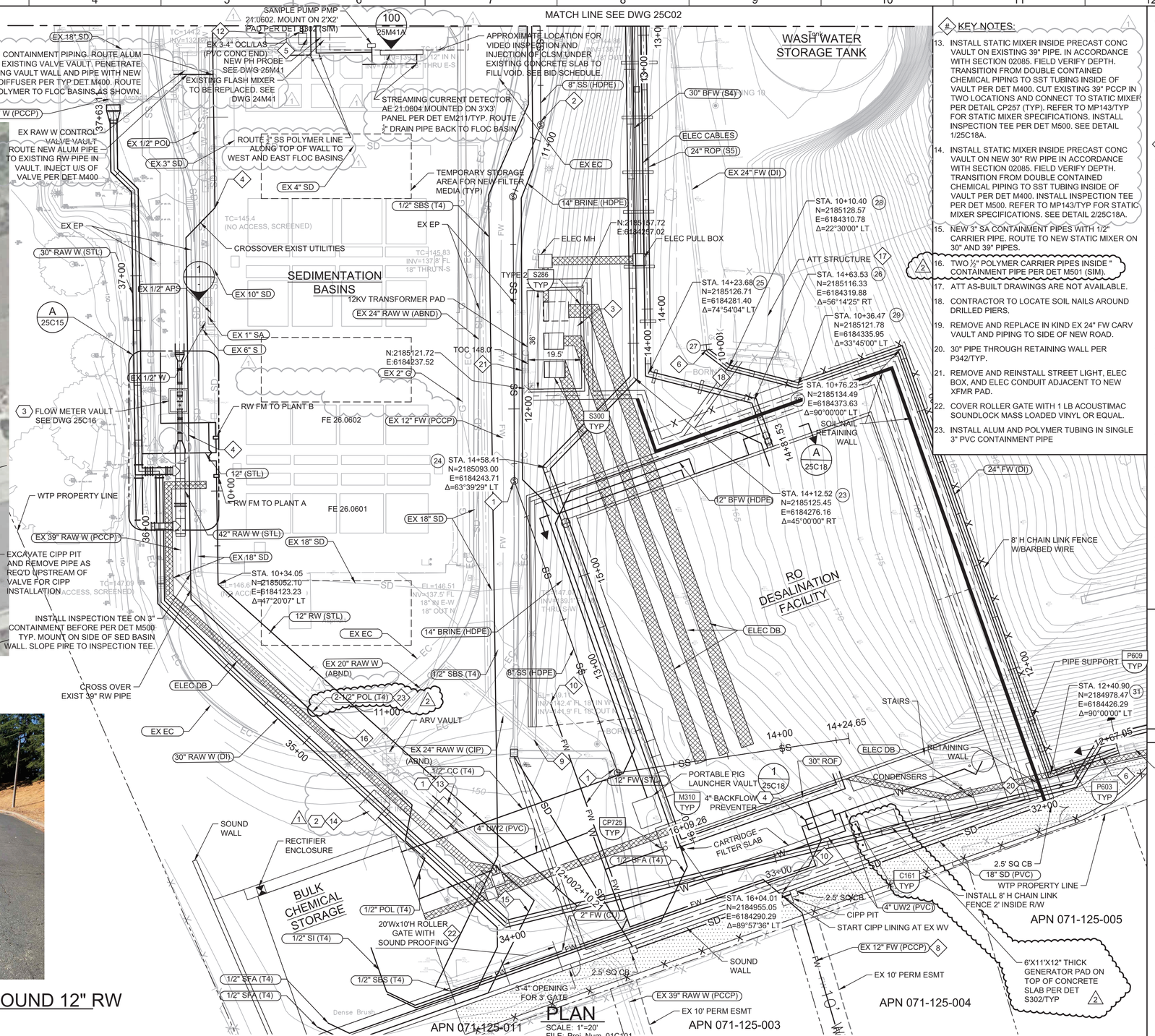

PLAN

SCALE: 1"=20'
FILE: Proj_Num_01C101

KEY NOTES:

13. INSTALL STATIC MIXER INSIDE PRECAST CONC VAULT ON EXISTING 39" PIPE. IN ACCORDANCE WITH SECTION 02085. FIELD VERIFY DEPTH. TRANSITION FROM DOUBLE CONTAINED CHEMICAL PIPING TO SST TUBING INSIDE OF VAULT PER DET M400. CUT EXISTING 39" PCCP IN TWO LOCATIONS AND CONNECT TO STATIC MIXER PER DETAIL CP257 (TYP). REFER TO MP143/TYP FOR STATIC MIXER SPECIFICATIONS. INSTALL INSPECTION TEE PER DET M500. SEE DETAIL 1/25C18A.
14. INSTALL STATIC MIXER INSIDE PRECAST CONC VAULT ON NEW 30" RW PIPE IN ACCORDANCE WITH SECTION 02085. FIELD VERIFY DEPTH. TRANSITION FROM DOUBLE CONTAINED CHEMICAL PIPING TO SST TUBING INSIDE OF VAULT PER DET M400. INSTALL INSPECTION TEE PER DET M500. REFER TO MP143/TYP FOR STATIC MIXER SPECIFICATIONS. SEE DETAIL 2/25C18A.
15. NEW 3" SA CONTAINMENT PIPES WITH 1/2" CARRIER PIPE. ROUTE TO NEW STATIC MIXER ON 30" AND 39" PIPES.
16. TWO ½" POLYMER CARRIER PIPES INSIDE " CONTAINMENT PIPE PER DET M501 (SIM).
17. ATT AS-BUILT DRAWINGS ARE NOT AVAILABLE.
18. CONTRACTOR TO LOCATE SOIL NAILS AROUND DRILLED PIERS.
19. REMOVE AND REPLACE IN KIND EX 24" FW CARV VAULT AND PIPING TO SIDE OF NEW ROAD.
20. 30" PIPE THROUGH RETAINING WALL PER P342/TYP.
21. REMOVE AND REINSTALL STREET LIGHT, ELEC BOX, AND ELEC CONDUIT ADJACENT TO NEW XFMR PAD.
22. COVER ROLLER GATE WITH 1 LB ACOUSTIMAC SOUNDLOCK MASS LOADED VINYL OR EQUAL.
23. INSTALL ALUM AND POLYMER TUBING IN SINGLE 3" PVC CONTAINMENT PIPE

GENERAL NOTES:

1. SEE DWG G05 FOR GENERAL NOTES AND PIPELINE NOTES.
2. SEE DWG 25C12 FOR 24" ROP AND 8" SS PROFILES. DWG 25C13 FOR 30" BFW PROFILE. DWG 25C14 FOR 18" SD AND 24" FW PROFILES. AND P41 FOR 14" BRINE PROFILE.
3. ALL CHEMICAL PIPING SHALL BE DOUBLE CONTAINED PIPE PER PIPE SCHEDULE ON DWGS G18 & G19. INSTALL WITH 3' MIN COVER PER CP111 WITH CLSM BEDDING UNO.

KEY NOTES:

1. INSTALL SSMH PER C010/TYP.
2. INSTALL TYPE 1 CLEANOUTS PER CP411/TYP.
3. SEE STRUCTURAL DWGS FOR SLAB AND RETAINING WALL DETAILS. RETAINING WALL PER S286/TYP. STRUCTURAL SLAB PER S300/TYP. SEE ELECTRICAL DWGS FOR EQUIPMENT DETAILS.
4. MOUNT POLYMER PIPE ON SIDE OF BASIN. SEE DWG 25C19 PHOTOS #1 AND #2.
5. TERMINATE TEE INTO EX 3" ALUM AT EXISTING CHEMICAL INJECTION PORT. SEE DWG 25C19 PHOTOS #3 AND #4.
6. PROVIDE RESTRAINED COUPLING ADAPTORS AND FITTINGS AS REQUIRED TO CONNECT TO EXISTING 24" FW AT 2 LOCATIONS.
7. SEE DWG 25M01 FOR CARTRIDGE FILTERS AND CONTINUATION OF BFW AND ROP PIPE.
8. APPROXIMATELY 250 LF OF EXISTING 12" WATER PIPELINE TO BE REPAIRED IN PLACE USING CIPP LINER PER SPECIFICATION 02700. CCTV AND CLEANING OF WATER LINE TO REMOVE TUBERCULATION IS REQUIRED BEFORE LINER IS INSTALLED. ACCESS TO THE PIPE IS FROM THE WTP AND FROM TERRANOVA DRIVE. THERE ARE EX VALVES LOCATED AT EITHER END OF THE SECTION TO BE LINED. SEE DETAIL 2/-.
9. CONTRACTOR MAY REMOVE EX 20" RAW W IF REQUIRED FOR CONSTRUCTION. REMOVE PIPE TO NEAREST JOINT AND CAP PIPE TO REMAIN.
10. FIELD VERIFY EX 12" FW PIPE DIMENSIONS AND LOCATION IN ADVANCE OF CONSTRUCTION. TEMPORARY PIPING SHALL BE PROVIDED TO MAINTAIN SERVICE NORTH OF THE EXISTING VALVE AT THE CIPP PIT. INSTALL NEW 12" FW LINE AND CONNECT TO EX 12" FW LINE IN TWO LOCATIONS PER DETAIL CP257 AND CP111.
11. INSTALL 12"X14" WYE ADAPTORS AND FITTINGS TO PROVIDE A RESTRAINED CONNECTION BETWEEN THE 12" STL AND 14" PVC PIPES.
12. ABANDON EXISTING FLOW METER AND 6'X6' VAULT IN PLACE. FILL EXISTING VAULT WITH CLSM. CONSTRUCT NEW CONC SLAB PER S300/TYP ON TOP OF CLSM. MATCH GRADE OF ADJACENT SLABS.

Call before you Dig
Avoid cutting underground utility lines. It's costly.
Call 811

KEY MAP

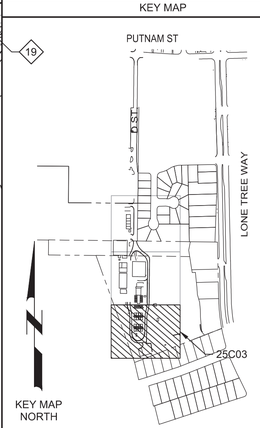

REV	DATE	BY	DESCRIPTION
2	11-19-2020	SW	REVISED PER ADDENDUM #6
1	11-4-2020	MMB	REVISED PER ADDENDUM #3

DESIGNED JES
DRAWN ART
CHECKED JM
DATE SEPTEMBER 2020

Digitally signed by Jill E. Shankel
Contact Info: Carollo Engineers, Inc.
Date: 2020.11.19 17:08:12-08'00'

REGISTERED PROFESSIONAL ENGINEER JILL E. SHANKEL No. 54604 CIVIL STATE OF CALIFORNIA

carollo

ANTIOCH CALIFORNIA OPPORTUNITY LIVES·HERE

CITY OF ANTIOCH
ANTIOCH BRACKISH WATER DESALINATION PROJECT
CIVIL
WATER TREATMENT PLANT YARD PIPING - 3

VERIFY SCALES
BAR IS ONE INCH ON ORIGINAL DRAWING
0 1"
IF NOT ONE INCH ON THIS SHEET, ADJUST SCALES ACCORDINGLY

JOB NO. 10024A.10
DRAWING NO. 25C03
SHEET NO. 101 OF 498

FILE NAME: 10024A1025C03.dwg
PROJECT NO. 10024A10
LAST SAVED BY: tdonnell

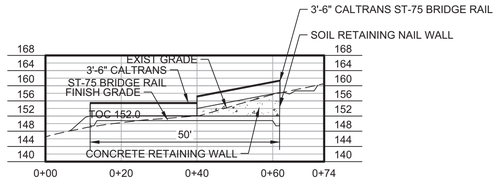

A GEN/XFMR/SWGR SLAB SECTION

SCALE: 1"=20'
FILE: -

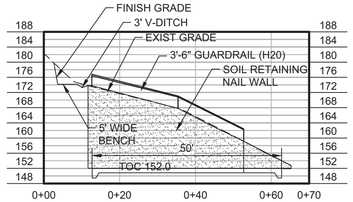

B GEN/XFMR/SWGR SLAB SECTION

SCALE: 1"=20'
FILE: -

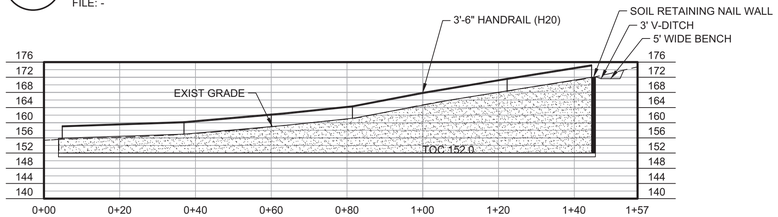

C GEN/XFMR/SWGR SLAB SECTION

SCALE: 1"=20'
FILE: -

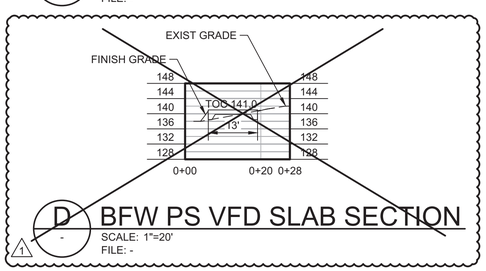

D BFW PS VFD SLAB SECTION

SCALE: 1"=20'
FILE: -

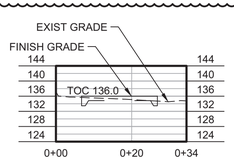

E SERVICE ENTRANCE SLAB SECTION

SCALE: 1"=20'
FILE: -

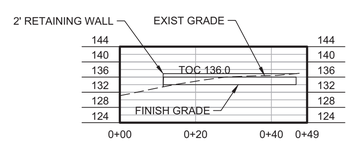

F SERVICE ENTRANCE SLAB SECTION

SCALE: 1"=20'
FILE: -

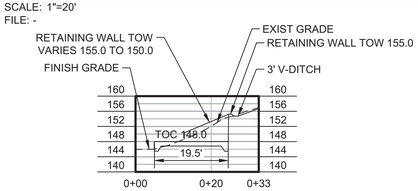

G XFMR SLAB SECTION

SCALE: 1"=20'
FILE: -

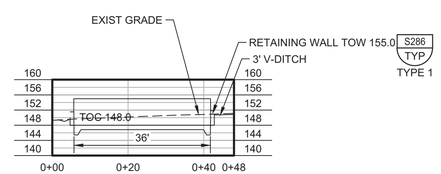

H XFMR SLAB SECTION

SCALE: 1"=20'
FILE: -

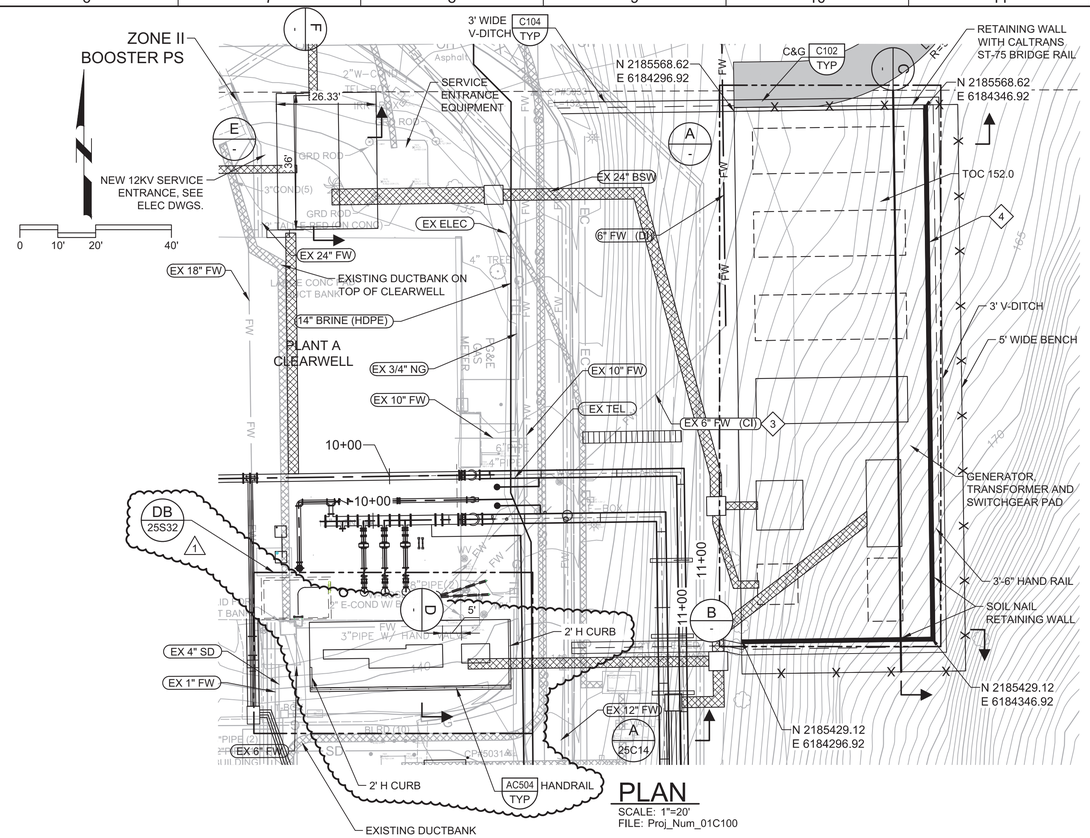

PLAN

SCALE: 1"=20'
FILE: Proj_Num_01C100

GENERAL NOTES:

1. SEE DWG G05 FOR GENERAL NOTES AND PIPELINE NOTES.

KEY NOTES:

1. SHALLOW FOUNDATIONS FOR THE GENERATOR PAD SHOULD BE UNDERLAIN BY A MINIMUM OF 24 INCHES OF AGGREGATE BASE WHERE SOIL IS EXPOSED IN THE SUBGRADE. WHERE ROCK IS EXPOSED IN THE SUBGRADE, THE SHALLOW FOUNDATIONS SHOULD BE UNDERLAIN BY A MINIMUM OF 6 INCHES OF AGGREGATE BASE.
2. SEE PAVING SCHEDULE ON DWG G05 FOR ROAD SECTION.
3. REMOVE EX 6" FW PIPE AS REQ'D FOR GENERATOR PAD CONSTRUCTION AS SHOWN ON 25D01. INSTALL NEW 6" FW. EX FW ALIGNMENT AND CONNECTION POINTS SHOWN ARE APPROXIMATE AND SHALL BE VERIFIED BY CONTRACTOR PRIOR TO CONSTRUCTION. REFER TO SECTION 01140 FOR SHUTDOWN RESTRICTIONS.
4. SEE DWG 25C20 FOR NAIL RETAINING WALL ELEVATIONS.
5. CONCRETE ENCASE EXISTING UTILITIES IF LOCATED UNDER SLAB. (1)

Call before you Dig
Avoid cutting underground utility lines. It's costly.
Call 811

KEY MAP

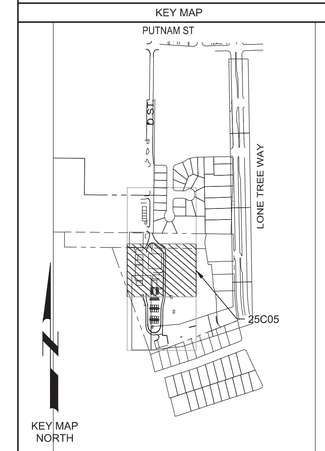

SCALE

REV	DATE	BY	DESCRIPTION
1	11-19-20	SW	REVISED PER ADDENDUM #6

DESIGNED JES
DRAWN ART
CHECKED JM
DATE SEPTEMBER 2020

Digitally signed by Jill E. Shankel
Contact Info: Carollo Engineers, Inc.
Date: 2020.11.19 17:08:40-08'00'

REGISTERED PROFESSIONAL ENGINEER JILL E. SHANKEL No. 54604 CIVIL STATE OF CALIFORNIA

carollo

ANTIOCH CALIFORNIA OPPORTUNITY LIVES·HERE

CITY OF ANTIOCH
ANTIOCH BRACKISH WATER DESALINATION PROJECT
CIVIL
WATER TREATMENT PLANT
PAVING AND GRADING - 2

VERIFY SCALES
BAR IS ONE INCH ON ORIGINAL DRAWING
0 1"
IF NOT ONE INCH ON THIS SHEET, ADJUST SCALES ACCORDINGLY

JOB NO. 10024A.10
DRAWING NO. 25C05
SHEET NO. 103 OF 498

Plot Date: 11/19/2020 4:12:25 PM
FILE NAME: 10024A1025C05.dwg
PROJECT NO. 10024A10
LAST SAVED BY: tdonnell

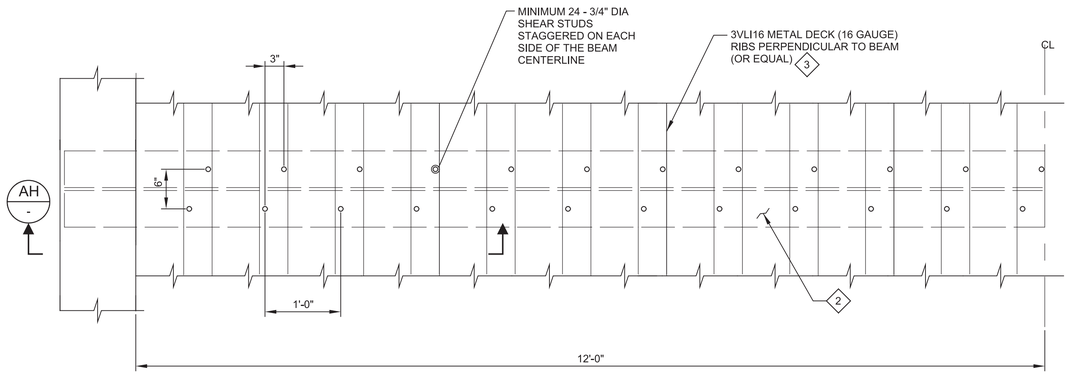

28 DETAIL
25S02
SCALE: 1"=1'-0"
FILE: 10024A1025S0416

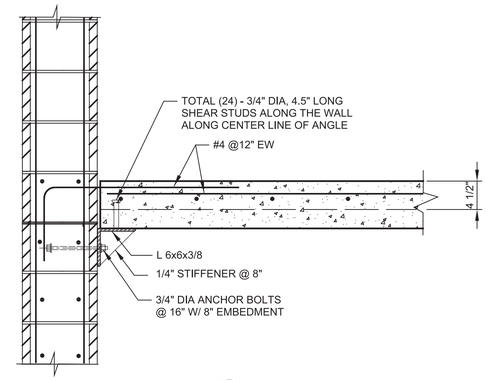

29 DETAIL
25S02
SCALE: 1"=1'-0"
FILE: 10024A1025S0416

KEY NOTES:

1. BEND HOOK UPWARDS WHERE BEAMS POCKETS ARE ENCOUNTERED. IN ALL OTHER PLACES BEND HOOK DOWNWARDS.
2. TOP FLANGE OF THE BEAM SHALL BE COATED WITH WELDABLE PRIMER.
3. 3VL/3VLI COMPOSITE DECK.
   SECTION PROPERTIES

DESIGN THICKNESS		DECK WEIGHT	SECTION PROPERTIES					
			I_P	S_P	I_N	S_N	V_A	F_Y
(IN)		(PSF)	(IN^4/FT)	(IN^3/FT)	(IN^4/FT)	(IN^3/FT)	(LBS/FT)	(KSI)
16	0.0598	3.47	1.582	1.013	1.582	1.013	4901	40

4. LENGTH OF THE CONCRETE PORTION OF THE WALL WILL BE APPROXIMATED 60 FT AND 1'-4" DEEP AND THICKNESS EQUAL TO THICKNESS OF WALL. THIS MODIFICATION IS APPLICABLE TO BOTH WALLS TO WHICH COMPOSITE SLAB BEAM IS ANCHORED TO. (1)

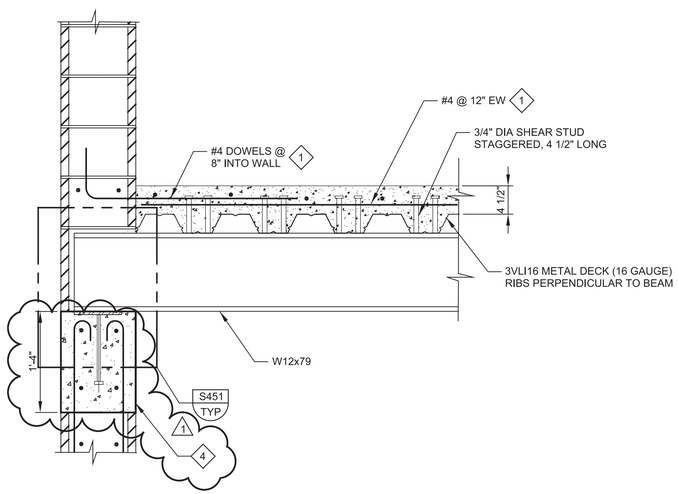

AH SECTION
-
SCALE: 1"=1'-0"
FILE: 10024A1025S0416

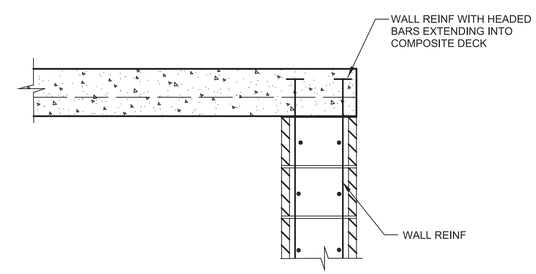

30 DETAIL
25S06
SCALE: 1"=1'-0"
FILE: 10024A1025S0416

REV	DATE	BY	DESCRIPTION
1	11-19-20	KP	REVISED PER ADDENDUM NO. 6

DESIGNED KVP
DRAWN TU
CHECKED MD
DATE SEPTEMBER 2020

REGISTERED PROFESSIONAL ENGINEER KAUSHIK V. PUNYAMURTULA No. 83261 CIVIL STATE OF CALIFORNIA

carollo

ANTIOCH CALIFORNIA OPPORTUNITY LIVES·HERE

CITY OF ANTIOCH
ANTIOCH BRACKISH WATER DESALINATION PROJECT
STRUCTURAL
RO BUILDING
SECTION AND DETAILS

VERIFY SCALES
BAR IS ONE INCH ON ORIGINAL DRAWING
0 1"
IF NOT ONE INCH ON THIS SHEET, ADJUST SCALES ACCORDINGLY

JOB NO. 10024A.10
DRAWING NO. 25S14
SHEET NO. 152 OF 498

Model: Layout1 ColorTable: gshade.ctb DesignScript: Carollo_Std_Pen_v0905.pen PlotScale: 1:1 Plot Date: 19-NOV-2020 11:47:54 AM User: svcPW LAST SAVED BY: gleal

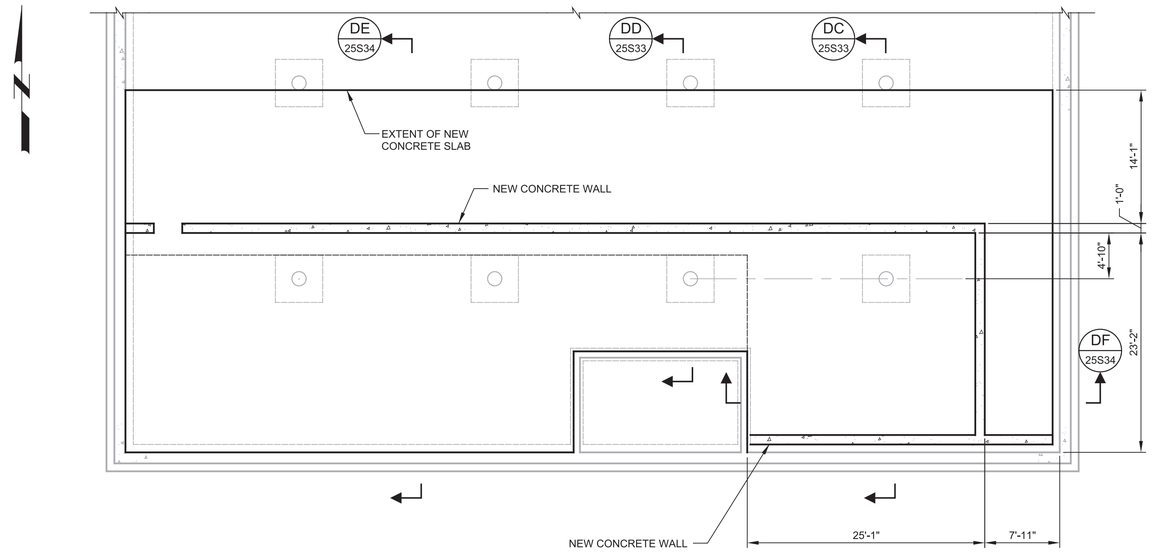

DA FOUNDATION PLAN

SCALE: 1/8" = 1'-0"
FILE: 10024A1025D101

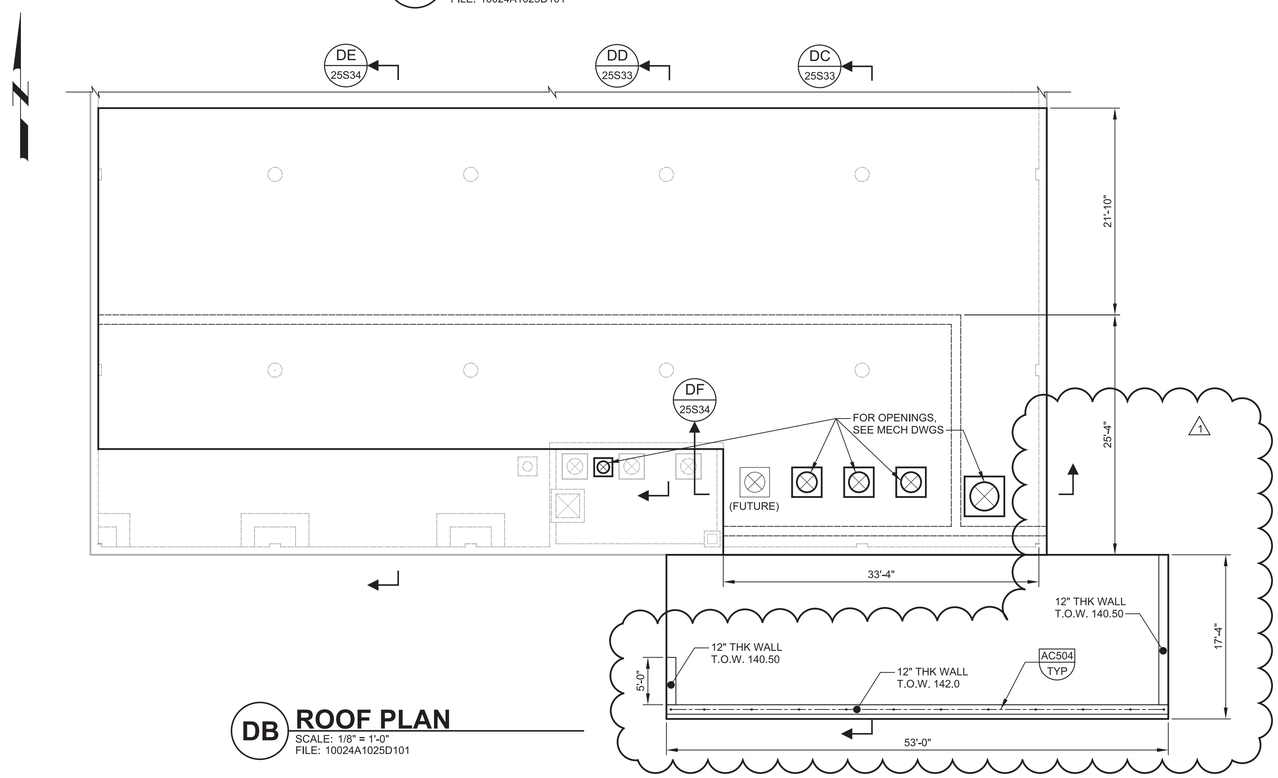

DB ROOF PLAN

SCALE: 1/8" = 1'-0"
FILE: 10024A1025D101

REV	DATE	BY	DESCRIPTION
1	11-19-20	KP	REVISED PER ADDENDUM NO.6

DESIGNED KVP
DRAWN TU
CHECKED MD
DATE SEPTEMBER 2020

Kaushik V. Panyamurtula

REGISTERED PROFESSIONAL ENGINEER KAUSHIK V. PUNYAMURTULA No. 83261 CIVIL STATE OF CALIFORNIA

carollo

ANTIOCH CALIFORNIA OPPORTUNITY LIVES·HERE

CITY OF ANTIOCH

ANTIOCH BRACKISH WATER DESALINATION PROJECT

STRUCTURAL

BRACKISH FILTERED WATER PUMP STATION PLANS

VERIFY SCALES
BAR IS ONE INCH ON ORIGINAL DRAWING
0 1"
IF NOT ONE INCH ON THIS SHEET, ADJUST SCALES ACCORDINGLY

JOB NO. 10024A.10
DRAWING NO. 25S32
SHEET NO. 170 OF 498

Plot Date: 19-NOV-2020 11:47:56 AM
User: svcPW
PlotScale: 1:1
DesignScript: Carollo_Std_Pen_v0905.pen
ColorTable: gshade.ctb
Model: Layout1
LAST SAVED BY: gleal

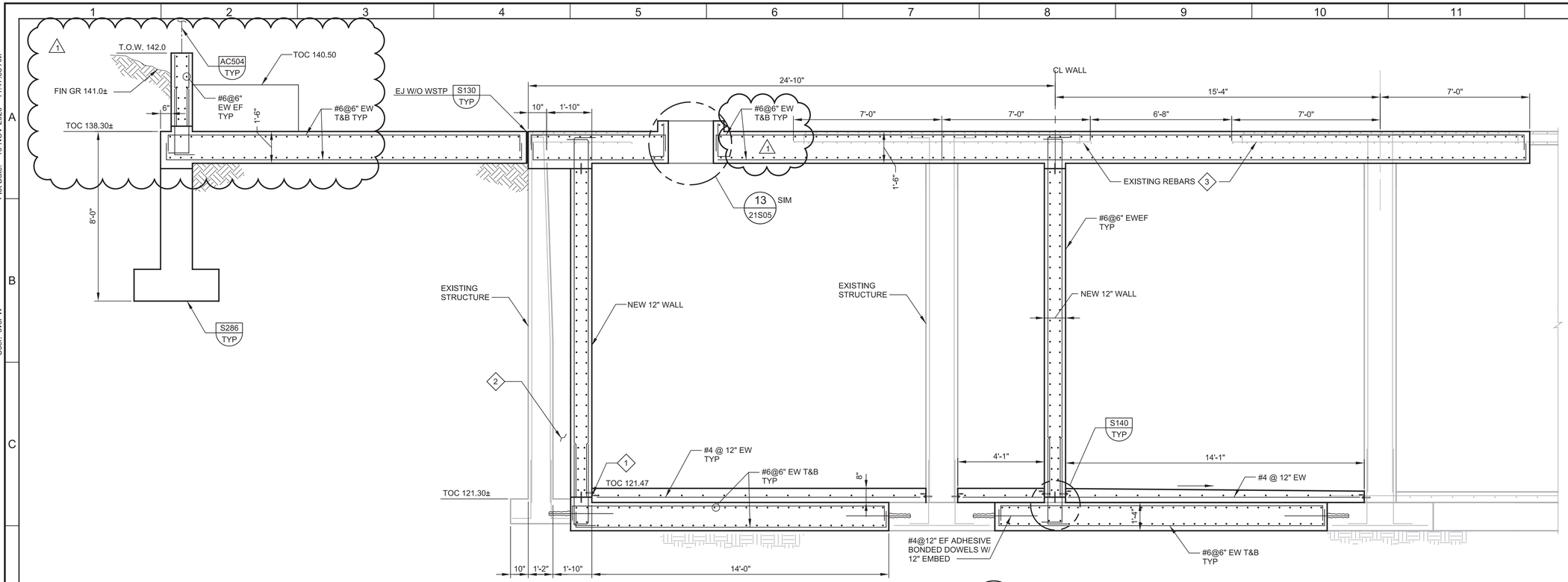

DC SECTION

25S32

SCALE: 3/8"=1'-0"
FILE: 10024A1025S103

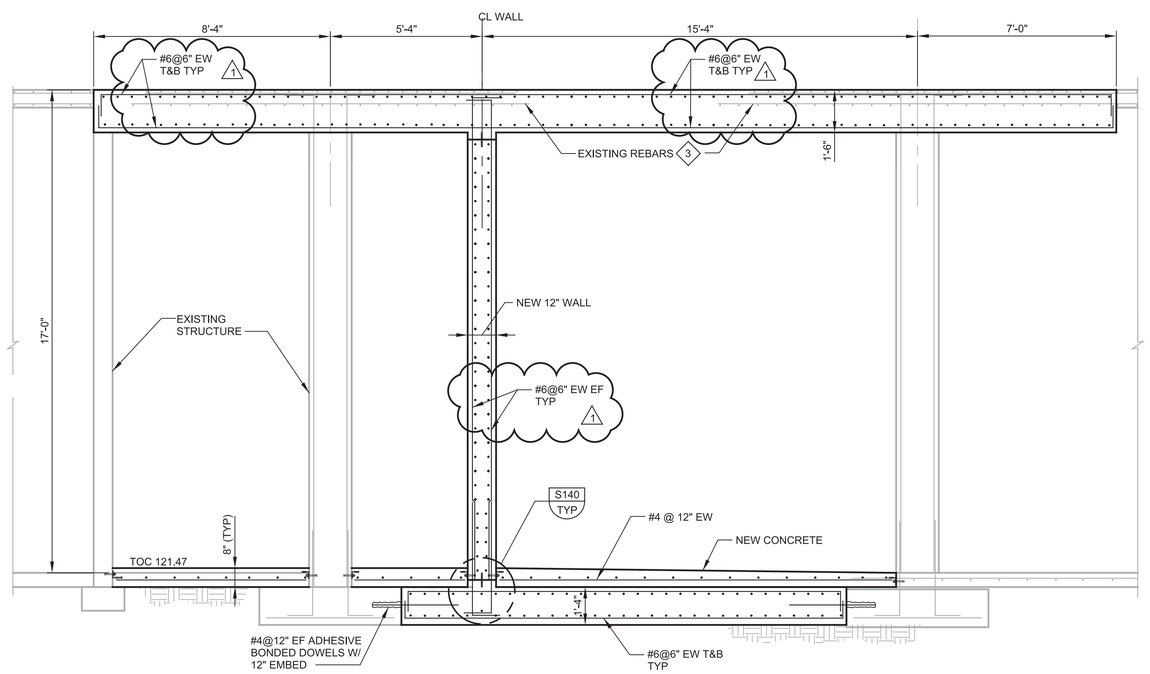

DD SECTION

25S32

SCALE: 3/8"=1'-0"
FILE: 10024A1025S103

GENERAL NOTES:

1. SHALLOW FOUNDATIONS F SHALL CONSIST OF MINIMUM OF 24-INCHES OF AGGREGATE BASE.
2. CONTRACTOR TO VERIFY ALL DIMENSIONS PRIOR TO CONSTRUCTION .

KEY NOTES:

1. SIKA RETROFIT WATER STOP NO. 655 OR EQUAL.
2. CONTRACTOR TO CONSIDER VOID FORM SEPERATOR.
3. EXISTING REBAR IN THE SLAB TO EXTEND BY A MINIMUM OF 7'-0" ON EACH SIDE MEASURED FROM CENTRE OF EXISTING COLUMN.

REV	DATE	BY	DESCRIPTION
1	11-19-20	KP	REVISED PER ADDENDUM NO. 6

DESIGNED KVP
DRAWN TU
CHECKED MD
DATE SEPTEMBER 2020

REGISTERED PROFESSIONAL ENGINEER KAUSHIK V. PUNYAMURTULA No. 83261 CIVIL STATE OF CALIFORNIA

carollo

ANTIOCH CALIFORNIA OPPORTUNITY LIVES·HERE

CITY OF ANTIOCH

ANTIOCH BRACKISH WATER DESALINATION PROJECT

STRUCTURAL

BRACKISH FILTERED WATER PUMP STATION SECTIONS

VERIFY SCALES
BAR IS ONE INCH ON ORIGINAL DRAWING
0 1"
IF NOT ONE INCH ON THIS SHEET, ADJUST SCALES ACCORDINGLY

JOB NO. 10024A.10
DRAWING NO. 25S33
SHEET NO. 171 OF 498

Model: Layout1 ColorTable: gshade.ctb DesignScript: Carollo_Std_Pen_v0905.pen PlotScale: 1:1 Plot Date: 19-NOV-2020 11:47:55 AM User: svcPW LAST SAVED BY: gleal

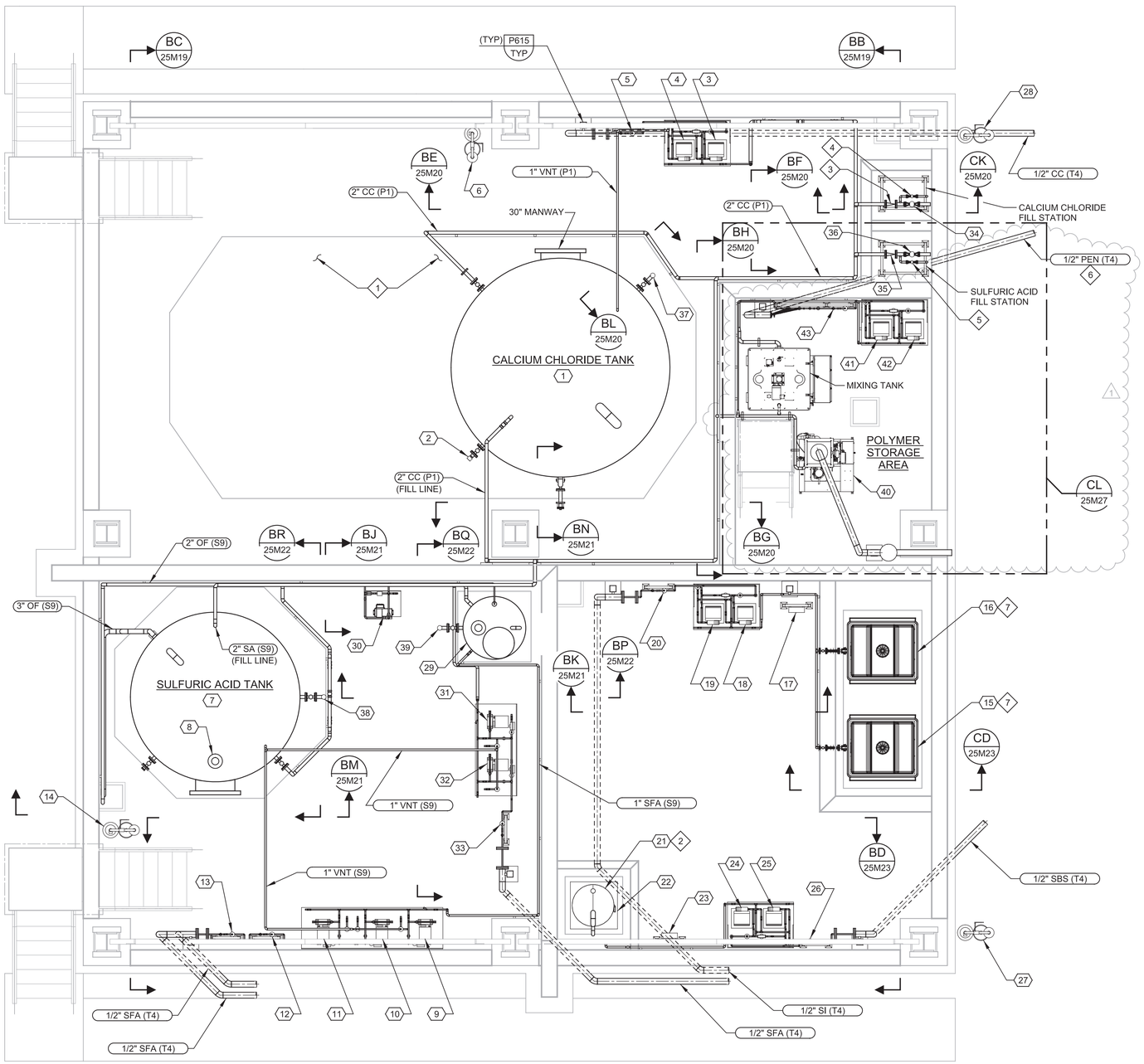

BA PLAN

SCALE: 1/4" = 1'-0"
FILE: 10024A1025M0107

GENERAL NOTES:

1. ENCASE PIPING UNDER STRUCTURE IN CONCRETE PER TYPICAL DETAIL CP119/TYP.
2. HEAT TRACE SBS AND SI PIPING.
3. COAT ALL CONCRETE SURFACES INSIDE CHEMICAL STORAGE AREA WITH VINYL ESTER COATING PER SECTION 09960. COAT INSIDE WALL SURFACES, TOP OF WALL SURFACES, SUMP AREA, TANK FILL AREA, EQUIPMENT PADS, TANK PADS, AND FLOOR. CONCRETE FLOOR SURFACE TO HAVE A NONSKID SURFACE.
4. ALL BALL VALVES IN THE CALCIUM CHLORIDE AREA ARE BV 320 UNLESS OTHERWISE NOTED. SEE P&IDS FOR VALVE TAGS AND SIZES.
5. ALL BALL VALVES IN THE SODIUM BISULFITE AREA ARE BV 320 UNLESS OTHERWISE NOTED. SEE P&IDS FOR VALVE TAGS AND SIZES.
6. ALL BALL VALVES IN THE SCALE INHIBITOR AREA ARE BV 320 UNLESS OTHERWISE NOTED. SEE P&IDS FOR VALVE TAGS AND SIZES.
7. ALL BALL VALVES IN THE SULFURIC ACID AREA ARE BV 305 UNLESS OTHERWISE NOTED. SEE P&IDS FOR VALVE TAGS AND SIZES.

KEY NOTES:

1. COORDINATE NOTCH IN CONCRETE WITH TANK MANUFACTURER. SIZE NOTCH DIMENSIONS AND DEPTH TO ACCOMMODATE TANK OUTLET AND FITTINGS. ALSO CREATE NOTCHES NECESSARY TO ACCOMMODATE A FUTURE CALCIUM CHLORIDE TANK THAT WILL MIRROR THE TANK INCLUDED IN THIS PROJECT.
2. PROVIDE AN ELECTRIC HEATING BLANKET MANUFACTURED BY POWERBLANKET, OR EQUAL, THAT PROVIDES FULL COVERAGE OF THE SODIUM BISULFITE DAY TANK. SIZE THE BLANKET BASED ON THE DIMENSIONS OF THE DAY TANK WITH CUTOUTS FOR THE TANKS PIPING AND OTHER APPURTENANCES. HEATING BLANKET TO HEAT THE CONTENTS OF THE DAY TANK BETWEEN 70-100 DEG F. VOLTAGE FOR THE BLANKET SHALL BE 120 VAC. BLANKET TO INCLUDE INTERNAL THERMOSTAT, HAVE AN OUTER COVERING MADE OF VINYL, AND A NEMA 5-20 PLUG.
3. 2" CV 633.
4. 1" BV 320.
5. 1" BV 305.
6. TWO (T4) POLYMER CARRIER TUBES WILL RUN INSIDE A SINGLE CONTAINMENT PIPE (P1).
7. PROVIDE AN ELECTRIC HEATING BLANKET MANUFACTURED BY POWERBLANKET, OR EQUAL, THAT PROVIDES FULL COVERAGE OF EACH SCALE INHIBITOR TOTE. INCLUDE CUTOUTS FOR THE TOTES PIPING AND OTHER APPURTENANCES. HEATING BLANKET TO HEAT THE CONTENTS OF THE TOTE BETWEEN 70-100 DEG F. VOLTAGE FOR THE BLANKET SHALL BE 120 VAC. BLANKET TO INCLUDE INTERNAL THERMOSTAT, HAVE AN OUTER COVERING MADE OF VINYL, AND A NEMA 5-20 PLUG.

KEY TAGS:

1	TNK 66.0901	CALCIUM CHLORIDE TANK NO. 1
2	LE 66.0901	CALCIUM CHLORIDE TANK LEVEL INDICATING TRANSMITTER
3	PMP 66.0901	CALCIUM CHLORIDE PUMP NO. 1
4	PMP 66.0902	CALCIUM CHLORIDE PUMP NO. 2
5	FE 66.0901	CALCIUM CHLORIDE FLOW METER NO. 1
6	FE 66.0904	EMERGENCY SHOWER/EYEWASH
7	TNK 66.0801	SULFURIC ACID TANK NO. 1
8	LE 66.0801B	ULTRASONIC LEVEL TRANSMITTER
9	PMP 66.0801	SULFURIC ACID PUMP NO. 1
10	PMP 66.0802	SULFURIC ACID PUMP NO. 2
11	PMP 66.0803	SULFURIC ACID PUMP NO. 3
12	FE 66.0802	SULFURIC ACID FLOW METER NO. 1
13	FE 66.0801	SULFURIC ACID FLOW METER NO. 2
14	FE 66.0801	EMERGENCY SHOWER/EYEWASH
15	WE1 69.0101	ANTISCALANT TOTE SCALE NO. 1
16	WE2 69.0101	ANTISCALANT TOTE SCALE NO. 2
17	WIT 69.0101	TOTE SCALE INDICATOR
18	PMP 69.0101	SCALE INHIBITOR METERING PUMP NO. 1
19	PMP 69.0102	SCALE INHIBITOR METERING PUMP NO. 2
20	FE 69.0101	SCALE INHIBITOR FLOW METER
21	TNK 65.0201	SODIUM BISULFITE DAY TANK
22	WE 65.0201	DAY TANK SCALE
23	WIT 65.0201	DAY TANK SCALE INDICATOR
24	PMP 65.0201	SODIUM BISULFITE METERING PUMP NO. 1
25	PMP 65.0202	SODIUM BISULFITE METERING PUMP NO. 2
26	FE 65.0201	SODIUM BISULFITE FLOW METER
27	FE 65.0201	EMERGENCY SHOWER/EYEWASH
28	FE 66.0901	EMERGENCY SHOWER/EYEWASH
29	TNK-66.0802	SULFURIC ACID DAY TANK
30	PMP 66.0806	SULFURIC ACID DAY TANK TRANSFER PUMP
31	PMP 66.0804	SULFURIC ACID METERING PUMP
32	PMP 66.0805	SULFURIC ACID METERING PUMP
33	FE 66.0804	SULFURIC ACID FLOW METER
34	VAL 66.0901A	2" BV 320
35	VAL 66.0801B	2" CV 670
36	VAL 66.0801A	2" BV 305
37	LI 66.0901	LEVEL INDICATOR
38	LI 66.0801	LEVEL INDICATOR
39	LI 66.0806B	LEVEL INDICATOR
40	FDR-61.1110	DRY POLYMER FEED PACKAGE, POLYMER ACTIVATION SYSTEM
41	PMP-61.1101	POLYMER METERING PUMP NO. 1
42	PMP-61.1102	POLYMER METERING PUMP NO. 2
43	FE-66.0901	POLYMER FLOW METER

REV	DATE	BY	DESCRIPTION
2	11-19-20	KF	REVISED PER ADDENDUM NO. 6
1	11-04-20	KF	REVISED PER ADDENDUM NO. 3

DESIGNED KF
DRAWN DPF
CHECKED BY
DATE SEPTEMBER 2020

Digitally signed by Scott C. Weddle
Contact Info: Carollo Engineers, Inc.
Date: 2020.11.19 10:25:37-08'00'

REGISTERED PROFESSIONAL ENGINEER SCOTT CLARK WEDDLE No. 49851 CIVIL STATE OF CALIFORNIA

carollo

ANTIOCH CALIFORNIA OPPORTUNITY LIVES·HERE

CITY OF ANTIOCH
ANTIOCH BRACKISH WATER DESALINATION PROJECT
MECHANICAL
CHEMICAL STORAGE PLAN

VERIFY SCALES
BAR IS ONE INCH ON ORIGINAL DRAWING
0 1"
IF NOT ONE INCH ON THIS SHEET, ADJUST SCALES ACCORDINGLY

JOB NO. 10024A.10
DRAWING NO. 25M18
SHEET NO. 195 OF 498

PROJECT NO. 10024A10 FILE NAME: 10024A1025M18.dgn

LAST SAVED BY: DFassbinder Model: Layout1 ColorTable: gshade.ctb DesignScript: Carollo_Std_Pen_v0905.pen PlotScale: 1:1 User: svcPW Plot Date: 18-NOV-2020 12:48:24 PM

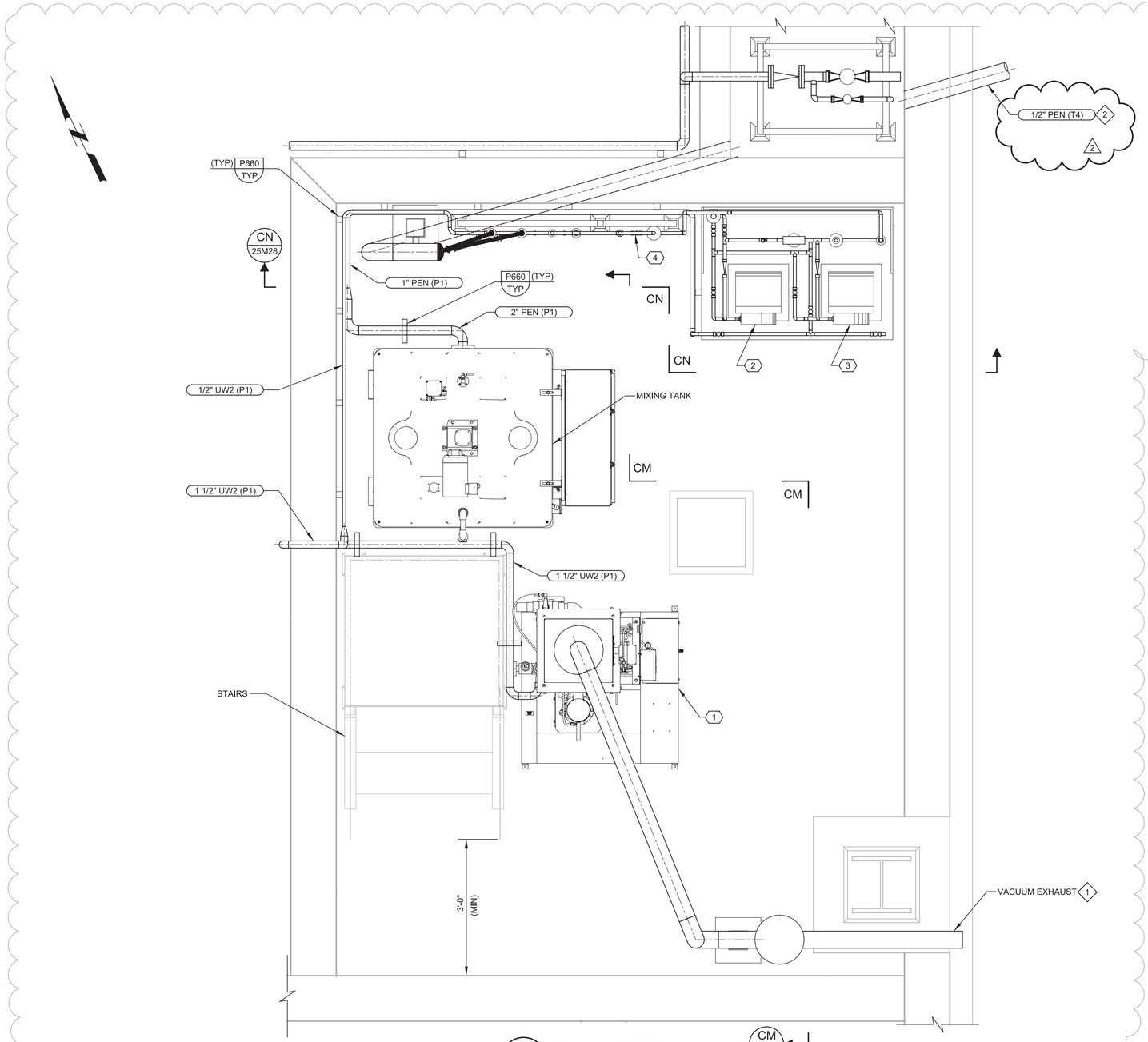

CL 25M18 PLAN DETAIL

SCALE: 3/4" = 1'-0"
FILE: 10024A1025M0107

GENERAL NOTES:

1. CONNECTIONS BETWEEN THE POLYMER ACTIVATION SYSTEM AND THE MIXING TANK NOT SHOWN FOR CLARITY.

KEY NOTES:

1. SUPPORT THE VACUUM EXHAUST PIPE OFF OF THE VERTICAL RUNNING H-BEAM NEARBY. USE UNISTRUT TO PROVIDE A MEANS OF SUPPORTING THE PIPE. REVIEW PLACEMENT AND SUPPORT LOCATION WITH ENGINEER PRIOR TO PERFORMING WORK. SUPPORTS AND EXHAUST PIPE CANNOT INTERFERE WITH STRUCTURAL GIRTS SUPPORTING THE SUNSHADE PANELING.
2. TWO (T4) POLYMER CARRIER TUBES WILL RUN INSIDE A SINGLE CONTAINMENT PIPE (P1).

KEY TAGS:

1	FDR-61.1110	DRY POLYMER FEED PACKAGE, POLYMER ACTIVATION SYSTEM
2	PMP-61.1101	POLYMER METERING PUMP NO. 1
3	PMP-61.1102	POLYMER METERING PUMP NO. 2
4	FE-66.0901	POLYMER FLOW METER

REV	DATE	BY	DESCRIPTION
2	11-19-20	KF	REVISED PER ADDENDUM NO. 6
1	11-04-20	KF	REVISED PER ADDENDUM NO. 3

DESIGNED KF
DRAWN DPF
CHECKED BY
DATE SEPTEMBER 2020

Digitally signed by Scott C. Weddle
Contact Info: Carollo Engineers, Inc.
Date: 2020.11.19 10:26:24-08'00'

REGISTERED PROFESSIONAL ENGINEER SCOTT CLARK WEDDLE No. 49851 CIVIL STATE OF CALIFORNIA

carollo

ANTIOCH CALIFORNIA OPPORTUNITY LIVES·HERE

CITY OF ANTIOCH
ANTIOCH BRACKISH WATER DESALINATION PROJECT
MECHANICAL
POLYMER STORAGE AREA PLAN

VERIFY SCALES
BAR IS ONE INCH ON ORIGINAL DRAWING
0 1"
IF NOT ONE INCH ON THIS SHEET, ADJUST SCALES ACCORDINGLY

JOB NO. 10024A.10
DRAWING NO. 25M27
SHEET NO. 204 OF 498

Plot Date: 18-NOV-2020 12:39:44 PM
User: svcPW
PlotScale: 1:1
DesignScript: Carollo_Std_Pen_v0905.pen
ColorTable: gshade.ctb
Model: Layout1
LAST SAVED BY: DFassbinder

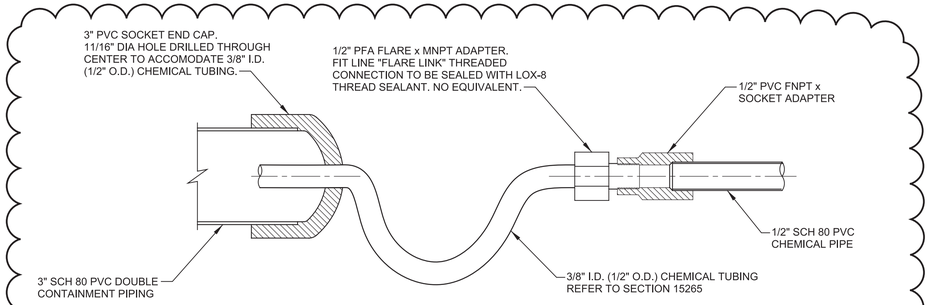

1 DETAIL - TRANSITION TO/FROM DOUBLE CONTAINMENT

SCALE: NO SCALE
FILE: 10024A1025M403

2

KEY TAGS:

1	FDR-61.1110	DRY POLYMER FEED PACKAGE, POLYMER ACTIVATION SYSTEM
2	PMP-61.1101	POLYMER METERING PUMP NO. 1
3	PMP-61.1102	POLYMER METERING PUMP NO. 2
4	FE-66.0901	POLYMER FLOW METER
5	VAL 611.1141	1/2" SOLENOID VALVE, SV931
6	FI 61.1143	1 GPM ROTAMETER
7	SMX 61.1143	1/2" STATIC MIXER
8	FI 61.1143B	1 GPM ROTAMETER
9	FI 61.1143C	1 GPM ROTAMETER

2

GENERAL NOTES:

1. CONNECTIONS BETWEEN THE POLYMER ACTIVATION SYSTEM AND THE MIXING TANK NOT SHOWN FOR CLARITY.

1

KEY NOTES:

1. EITHER SUPPORT THE VACUUM POWER UNIT AND COLLECTION BUCKET USING THE P615/TYP PIPE SUPPORT, OR MOUNT THE UNIT TO THE VERTICAL RUNNING H-BEAM NEARBY THAT IS SUPPORTING THE SHADE CANOPY. IF MOUNTING TO THE H-BEAM, USE UNISTRUT TO PROIDE A MEANS FOR ATTACHING THE UNIT. REVIEW PLACEMENT AND SUPPORT LOCATION WITH ENGINEER PRIOR TO PERFORMING WORK. COLLECTION BUCKET MUST HAVE 24-INCH CLEARANCE BENEATH IT. PLACEMENT CANNOT INTERFERE WITH STRUCTURAL GIRTS SUPPORTING THE SUNSHADE PANELING.
2. ROUTE VACUUM EXHAUST TO EXTERIOR OF CHEMICAL STORAGE AREA. ROUTING OF EXHAUST CANNOT INTERFERE WITH STRUCTURAL GIRTS SUPPORTING THE SUNSHADE PANELING.
3. PROVIDE ADDITIONAL PIPE SUPPORTS AS NEEDED TO ADEQUATELY SUPPORT THE 1/2" UW2 PIPE, USING TYPICAL DETAILS P660 AND P662.
4. FIELD ROUTE THE UW2 PIPE TO THE UW2 PIPE ON THE OPPOSITE SIDE OF THE WALL. PROVIDE ADDITIONAL PIPE SUPPORTS AS NEEDED TO ADEQUATELY SUPPORT THE UW2 PIPE OFF OF THE CONCRETE WALL USING TYPICAL DETAILS P660 AND P662.
5. COVER CALIBRATION COLUMN VENT WITH 316L SST #24 MESH.
6. SUPPORT 1 1/2-INCH UW2 PIPE OFF THE GROUND USING PIPE SUPPORTS SIMILAR TO P660. PIPE SUPPORT NOT SHOWN IN THIS VIEW FOR CLARITY.
7. FIXED HANDRAIL ALONG TWO SIDES OF PLATFORM ON TOP OF STAIRS. REMOVABLE CHAIN BARRIER ALONG PLATFORM SIDE CLOSEST TO POLYMER ACTIVATION SYSTEM.
8. 1/2" SCHEDULE 80 PVC STATIC MIXER WITH 12 FIXED MIXING ELEMENTS AND NSF 61 CERTIFIED. MANUFACTURED BY KOFLO CORPORATION, MODEL NO. 1/2-80-4-12-2 WITH NSF CERTIFICATION, OR EQUAL.
9. 1/2" CV 633.
10. ROUTE CHEMICAL TUBING TO 3" CONTAINMENT PIPE.
11. TWO (T4) POLYMER CARRIER TUBES WILL RUN INSIDE A SINGLE CONTAINMENT PIPE (P1).

2

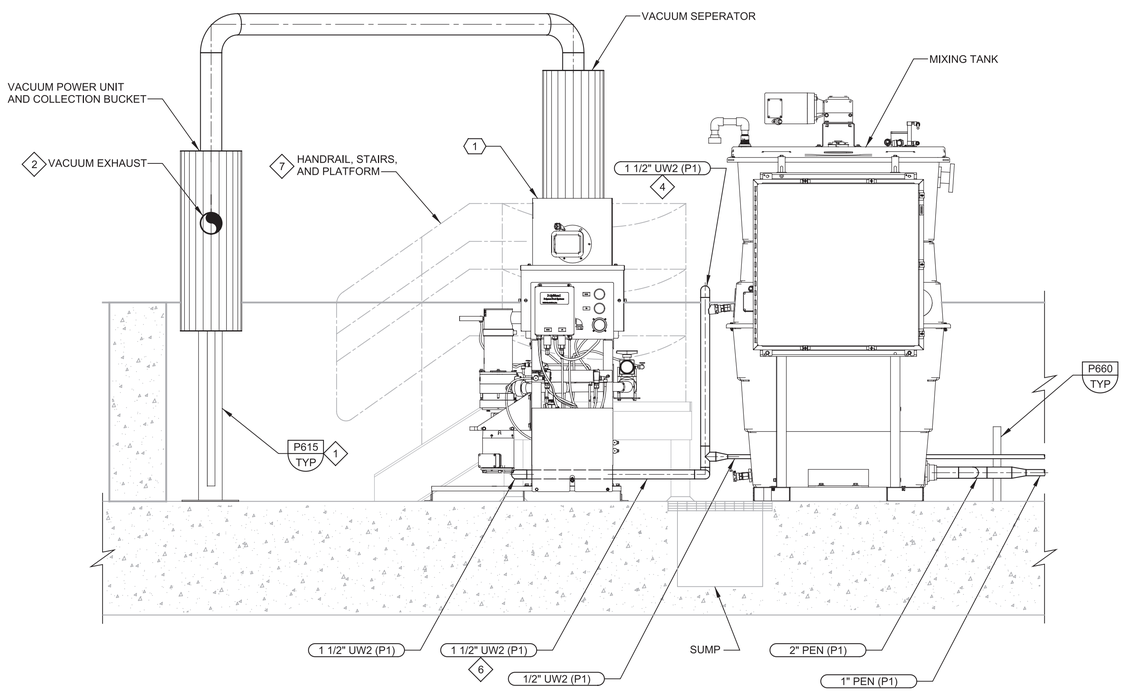

CM 25M27 SECTION

SCALE: 3/4" = 1'-0"
FILE: 10024A1025M0348

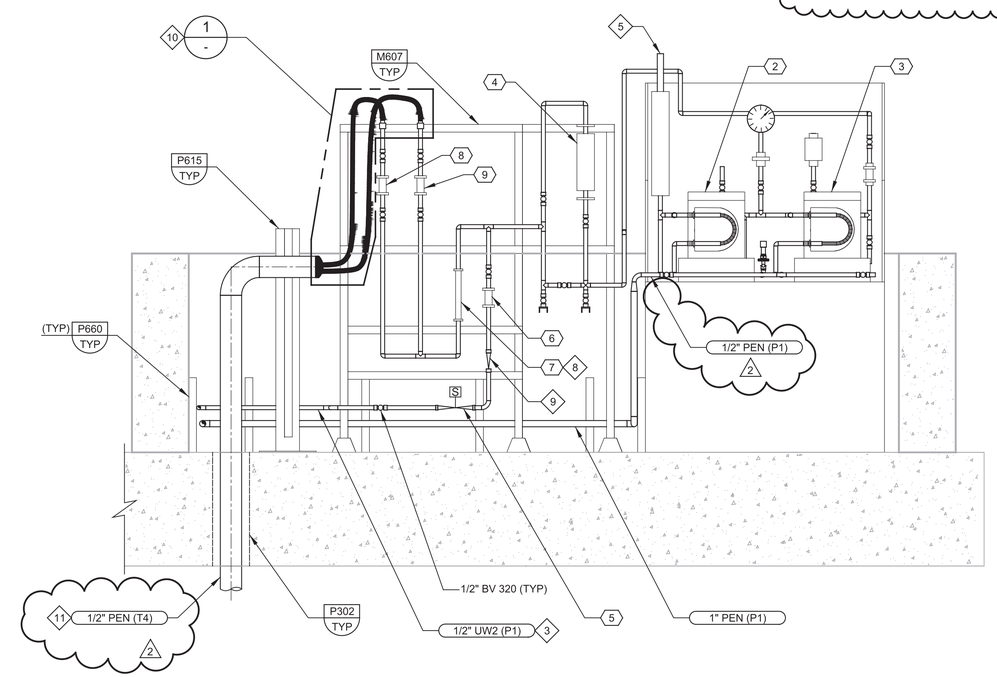

CN 25M27 SECTION

SCALE: 3/4" = 1'-0"
FILE: 10024A1025M0349

REV	DATE	BY	DESCRIPTION
2	11-19-20	KF	REVISED PER ADDENDUM NO. 6
1	11-04-20	KF	REVISED PER ADDENDUM NO. 3

DESIGNED KF
DRAWN DPF
CHECKED BY
DATE SEPTEMBER 2020

Digitally signed by Scott C. Weddle
Contact Info: Carollo Engineers, Inc.
Date: 2020.11.19 10:26:52-08'00'

REGISTERED PROFESSIONAL ENGINEER SCOTT CLARK WEDDLE No. 49851 CIVIL STATE OF CALIFORNIA

carollo

ANTIOCH CALIFORNIA OPPORTUNITY LIVES·HERE

CITY OF ANTIOCH
ANTIOCH BRACKISH WATER DESALINATION PROJECT
MECHANICAL
1
POLYMER STORAGE AREA SECTIONS

VERIFY SCALES
BAR IS ONE INCH ON ORIGINAL DRAWING
0 1"
IF NOT ONE INCH ON THIS SHEET, ADJUST SCALES ACCORDINGLY

JOB NO. 10024A.10
DRAWING NO. 25M28
SHEET NO. 204 OF 498

Plot Date: 18-NOV-2020 12:34:02 PM
User: svcPW
PlotScale: 1:1
DesignScript: Carollo_Std_Pen_v0905.pen
ColorTable: gshade.ctb
Model: Layout1
LAST SAVED BY: DFassbinder

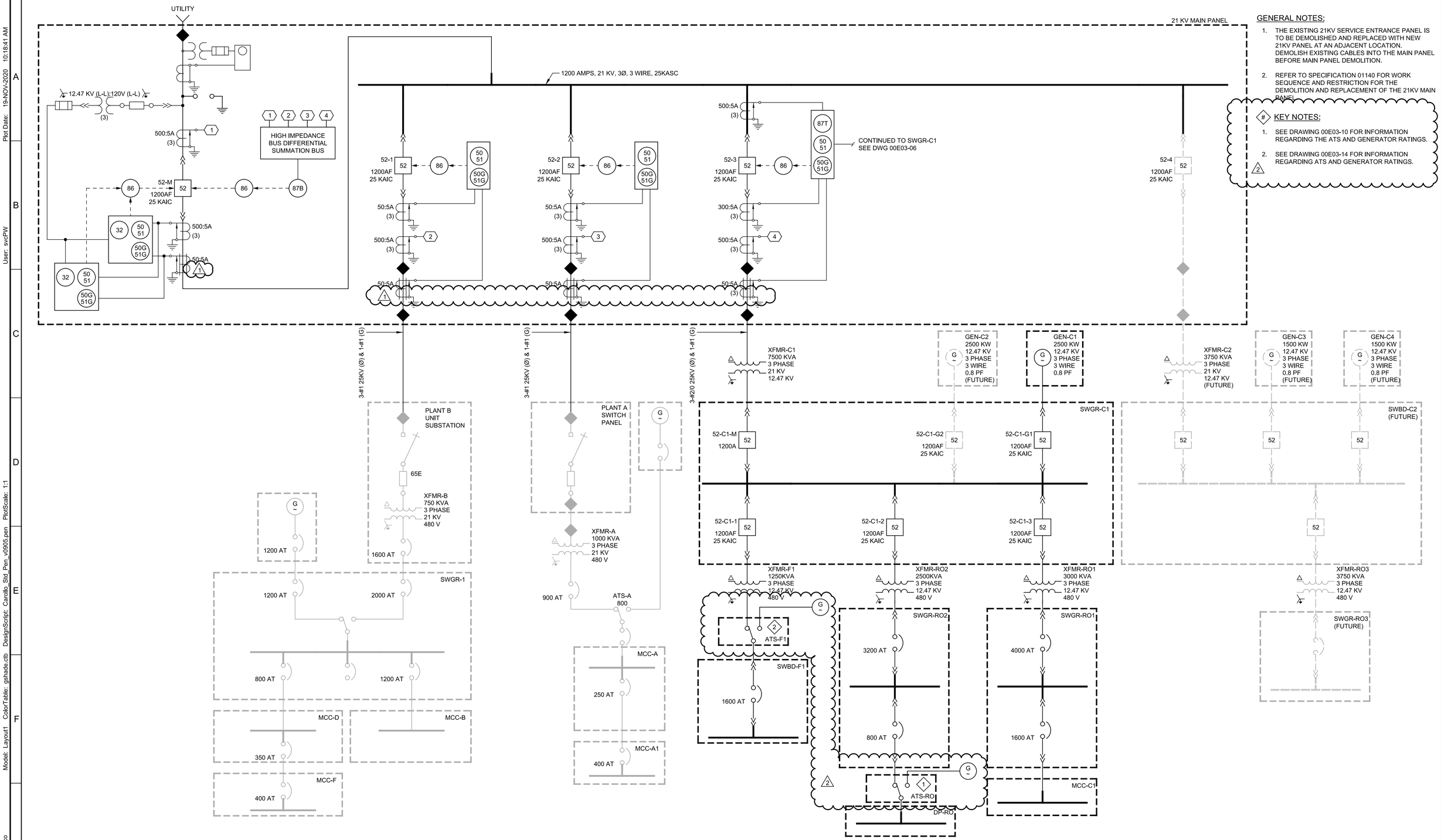

GENERAL NOTES:

1. THE EXISTING 21KV SERVICE ENTRANCE PANEL IS TO BE DEMOLISHED AND REPLACED WITH NEW 21KV PANEL AT AN ADJACENT LOCATION. DEMOLISH EXISTING CABLES INTO THE MAIN PANEL BEFORE MAIN PANEL DEMOLITION.
2. REFER TO SPECIFICATION 01140 FOR WORK SEQUENCE AND RESTRICTION FOR THE DEMOLITION AND REPLACEMENT OF THE 21KV MAIN PANEL.

KEY NOTES:

1. SEE DRAWING 00E03-10 FOR INFORMATION REGARDING THE ATS AND GENERATOR RATINGS.
2. SEE DRAWING 00E03-14 FOR INFORMATION REGARDING ATS AND GENERATOR RATINGS.

REV	DATE	BY	DESCRIPTION
2	11-19-20	AB	REVISED PER ADDENDUM NO.6
1	11-04-20	AB	REVISED PER ADDENDUM NO.3

DESIGNED AB
DRAWN SGS
CHECKED JGB
DATE SEPTEMBER 2020

Digitally signed by Ashritha Banapuram
Contact Info: Carollo Engineers, Inc.
Date: 2020.11.20 10:54:04-08'00'

REGISTERED PROFESSIONAL ENGINEER ASHRITHA BANAPURAM No. 21815 ELECTRICAL STATE OF CALIFORNIA

carollo

ANTIOCH CALIFORNIA OPPORTUNITY LIVES·HERE

CITY OF ANTIOCH

ANTIOCH BRACKISH WATER DESALINATION PROJECT

ELECTRICAL

MAIN PANEL ONE-LINE DIAGRAM

VERIFY SCALES
BAR IS ONE INCH ON ORIGINAL DRAWING
0 1"
IF NOT ONE INCH ON THIS SHEET, ADJUST SCALES ACCORDINGLY

JOB NO. 10024A.10
DRAWING NO. 00E03-04
SHEET NO. 241 OF 498

PROJECT NO. 10024A10 FILE NAME: 10024A1003E004.dgn

Plot Date: 19-NOV-2020 10:18:41 AM
User: svcPW
PlotScale: 1:1
DesignScript: Carollo_Std_Pen_v0905.pen
ColorTable: gshade.ctb
Model: Layout1
LAST SAVED BY: mpacheco

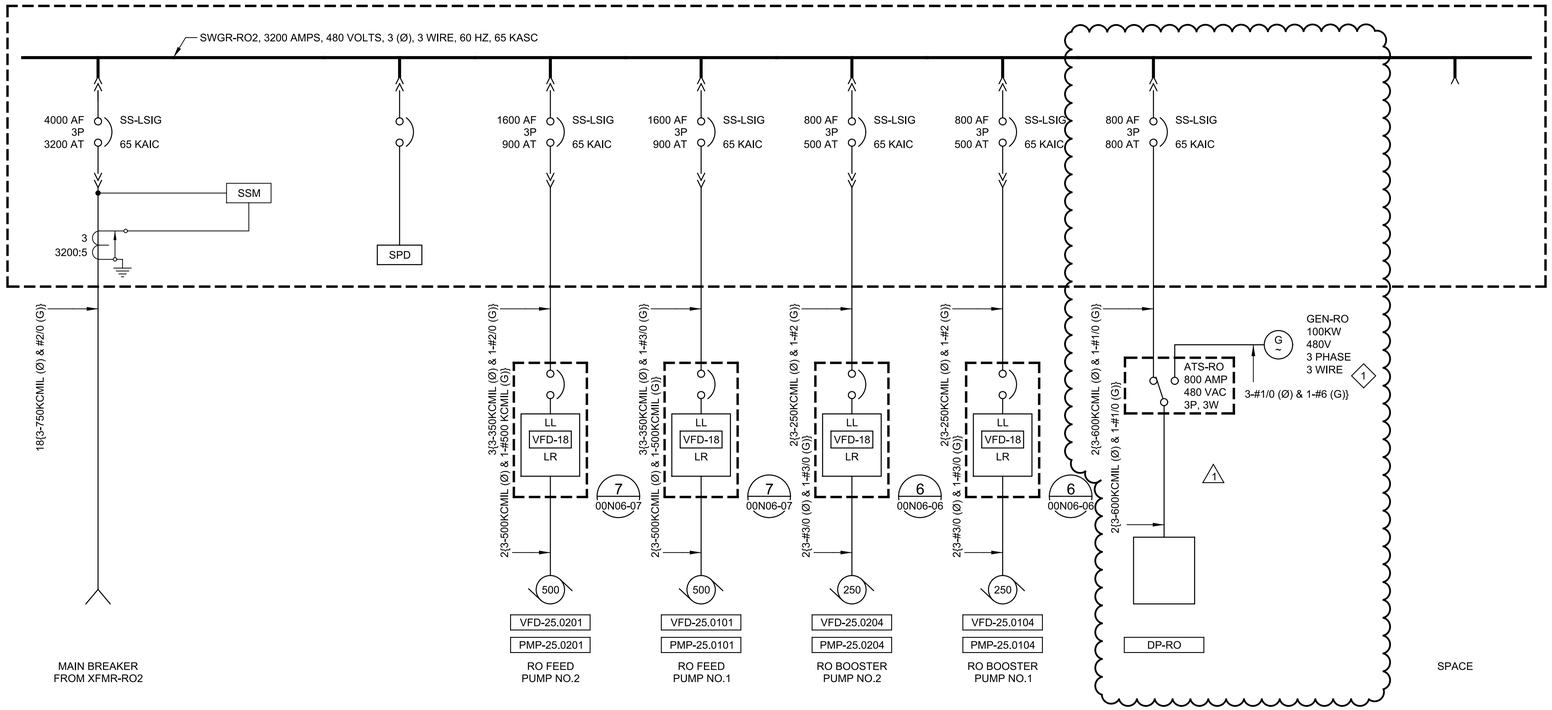

KEY NOTES:

1. PROVIDE A 100KVA, 480VAC GENERATOR FOR STANDBY POWER TO DP-RO. PROVIDE GENERATOR SUBMITTAL TO THE CITY AND THE ENGINEER FOR APPROVAL.

REV	DATE	BY	DESCRIPTION
1	11-19-20	AB	REVISED PER ADDENDUM NO.6

DESIGNED AB
DRAWN SMB
CHECKED JGB
DATE SEPTEMBER 2020

Digitally signed by Ashritha Banapuram
Contact Info: Carollo Engineers, Inc.
Date: 2020.11.20 12:05:28-08'00'

REGISTERED PROFESSIONAL ENGINEER ASHRITHA BANAPURAM No. 21815 ELECTRICAL STATE OF CALIFORNIA

carollo

ANTIOCH CALIFORNIA OPPORTUNITY LIVES·HERE

CITY OF ANTIOCH
ANTIOCH BRACKISH WATER DESALINATION PROJECT
ELECTRICAL
SWGR-RO2 ONE-LINE DIAGRAM

VERIFY SCALES
BAR IS ONE INCH ON ORIGINAL DRAWING
0 1"
IF NOT ONE INCH ON THIS SHEET, ADJUST SCALES ACCORDINGLY

JOB NO. 10024A.10
DRAWING NO. 00E03-10
SHEET NO. 247 OF 498

PROJECT NO. 10024A10 FILE NAME: 10024A1003E010.dgn

Plot Date: 19-NOV-2020 10:18:08 AM
User: svcPW
PlotScale: 1:1
DesignScript: Carollo_Std_Pen_v0905.pen
ColorTable: gshade.ctb
Model: Layout1
LAST SAVED BY: mpacheco

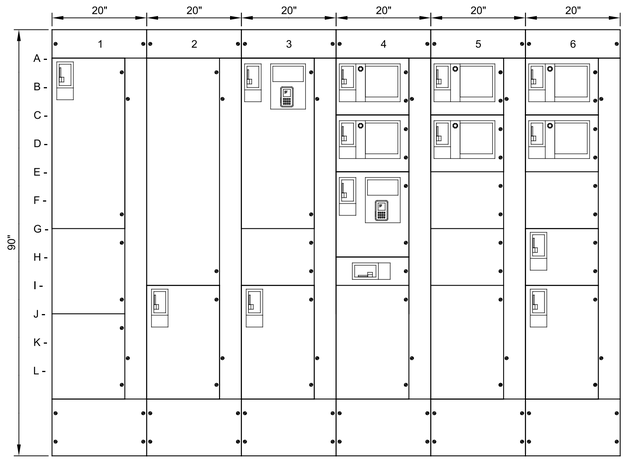

FRONT VIEW

SCALE: 3/4"=1'-0"
FILE: 10024A1003E626

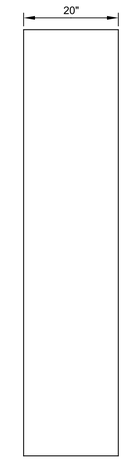

SIDE VIEW

SCALE: 3/4"=1'-0"
FILE: 10024A1003E626

1A- MAIN BREAKER	2A- SPACE	3A- PMP-25.0011 CIP MOTOR	4A- EF-79.3107 EXHAUST FAN	5A- SF-79.3106 SUPPLY FAN	6A- EF-79.3105 EXHAUST FAN
1G- SPACE	2I- HTR-25.0403 IMMERSION HEATER 2	3G- SPACE	4C- EF-79.3110 EXHAUST FAN	5C- SF-79.3108 SUPPLY FAN	6C- EF-79.3109 EXHAUST FAN
1J- SPACE		3I- HTR-25.0403 IMMERSION HEATER 2	4E- PMP-25.0903 FLUSH MOTOR	5E- SPACE	6E- SPACE
			4H- VAL-71.5002	5G- SPACE	6G- AHU-79.3101 AIR HANDLING UNIT
			4I- SPACE	5I- SPACE	6I- HP-79.3102 CONDENSER UNIT

REV	DATE	BY	DESCRIPTION
1	11-19-20	AB	REVISED PER ADDENDUM NO.6

DESIGNED AB
DRAWN SGS
CHECKED JGB
DATE SEPTEMBER 2020

Digitally signed by Ashritha Banapuram
Contact Info: Carollo Engineers, Inc.
Date: 2020.11.20 10:58:36 -08'00'

REGISTERED PROFESSIONAL ENGINEER ASHRITHA BANAPURAM No. 21815 ELECTRICAL STATE OF CALIFORNIA

carollo

ANTIOCH CALIFORNIA OPPORTUNITY LIVES•HERE

CITY OF ANTIOCH
ANTIOCH BRACKISH WATER DESALINATION PROJECT
ELECTRICAL
MCC-C1 ELEVATION

VERIFY SCALES
BAR IS ONE INCH ON ORIGINAL DRAWING
0 1"
IF NOT ONE INCH ON THIS SHEET, ADJUST SCALES ACCORDINGLY

JOB NO. 10024A.10
DRAWING NO. 00E03-11
SHEET NO. 248 OF 498

LAST SAVED BY: mpacheco Model: Layout1 ColorTable: gshade.ctb DesignScript: Carollo_Std_Pen_v0905.pen PlotScale: 1:1 User: svcPW Plot Date: 17-NOV-2020 9:24:43 AM

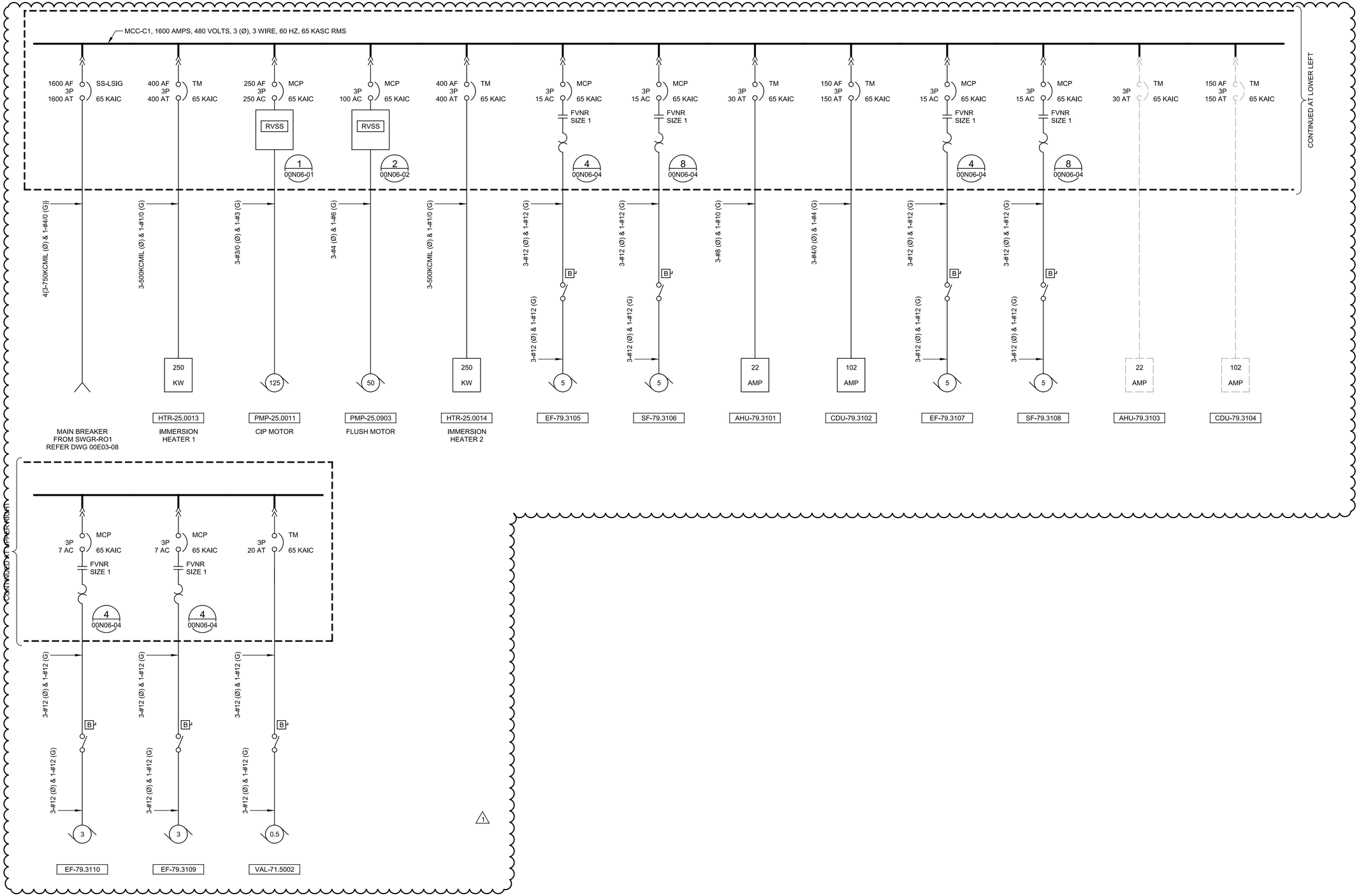

REV	DATE	BY	DESCRIPTION
1	11-19-20	AB	REVISED PER ADDENDUM NO.6

DESIGNED AB
DRAWN SGS
CHECKED JGB
DATE SEPTEMBER 2020

Digitally signed by Ashritha Banapuram
Contact Info: Carollo Engineers, Inc.
Date: 2020.11.20 10:54:34-08'00'

REGISTERED PROFESSIONAL ENGINEER ASHRITHA BANAPURAM No. 21815 ELECTRICAL STATE OF CALIFORNIA

carollo®

ANTIOCH CALIFORNIA OPPORTUNITY LIVES·HERE

CITY OF ANTIOCH

ANTIOCH BRACKISH WATER DESALINATION PROJECT

ELECTRICAL

MCC-C1 ONE-LINE DIAGRAM

VERIFY SCALES
BAR IS ONE INCH ON ORIGINAL DRAWING
0 1"
IF NOT ONE INCH ON THIS SHEET, ADJUST SCALES ACCORDINGLY

JOB NO. 10024A.10
DRAWING NO. 00E03-12
SHEET NO. 249 OF 498

PROJECT NO. 10024A10 FILE NAME: 10024A1003E012.dgn

LAST SAVED BY: mpacheco Model: Layout1 ColorTable: gshade.ctb DesignScript: Carollo_Std_Pen_v0905.pen PlotScale: 1:1 User: svcPW Plot Date: 19-NOV-2020 11:17:10 AM

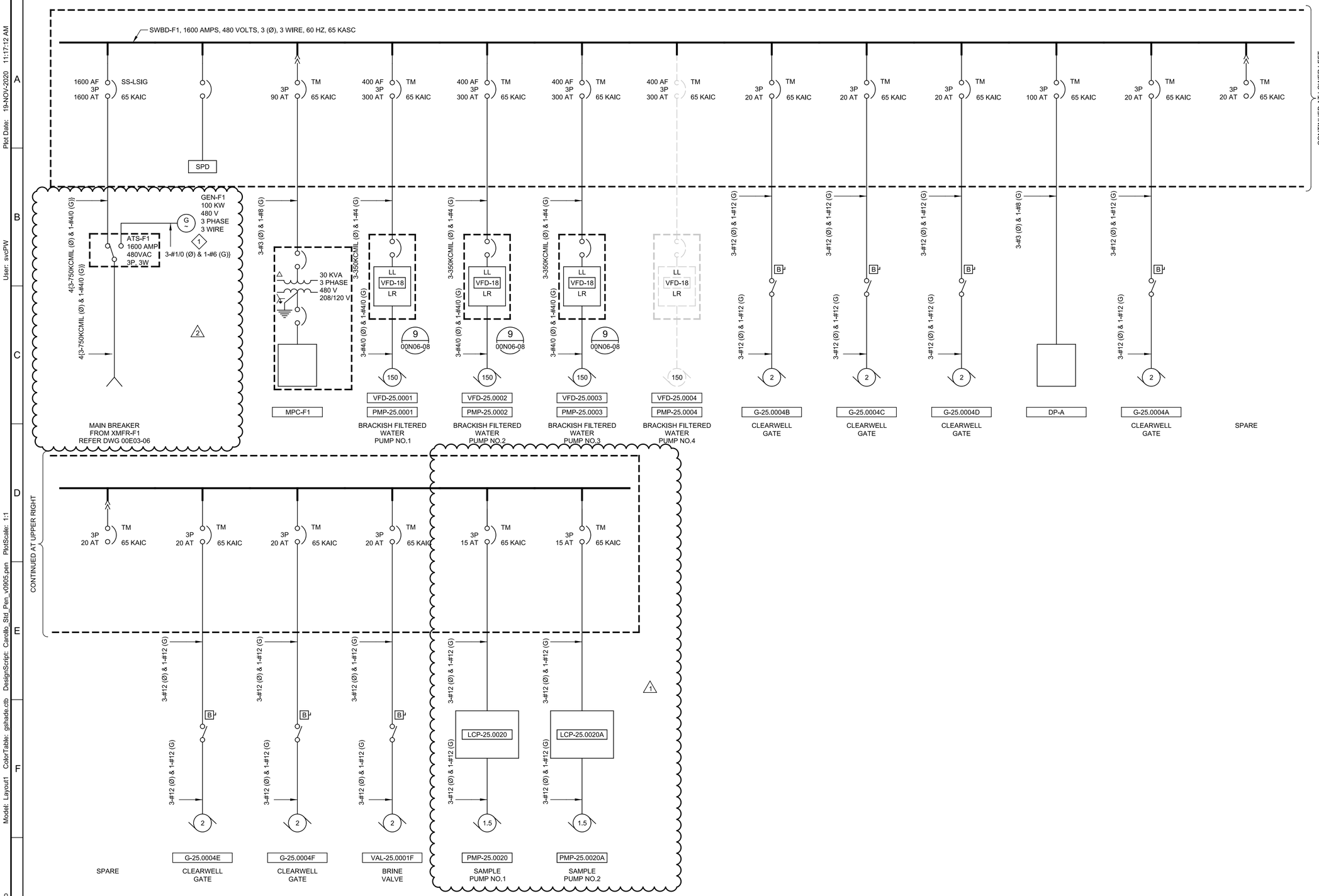

KEY NOTES:

1. PROVIDE A 100KVA, 480VAC GENERATOR FOR STANDBY POWER TO SWBD-F1. PROVIDE GENERATOR SUBMITTAL TO THE CITY AND THE ENGINEER FOR APPROVAL.

REV	DATE	BY	DESCRIPTION
2	11-19-20	AB	REVISED PER ADDENDUM NO.6
1	11-10-20	AB	REVISED PER ADDENDUM NO.4

DESIGNED AB
DRAWN SGS
CHECKED JGB
DATE SEPTEMBER 2020

Digitally signed by Ashritha Banapuram
Contact Info: Carollo Engineers, Inc.
Date: 2020.11.20 10:55:17-08'00'

REGISTERED PROFESSIONAL ENGINEER ASHRITHA BANAPURAM No. 21815 ELECTRICAL STATE OF CALIFORNIA

carollo

ANTIOCH CALIFORNIA OPPORTUNITY LIVES·HERE

CITY OF ANTIOCH

ANTIOCH BRACKISH WATER DESALINATION PROJECT

ELECTRICAL

SWBD-F1 ONE-LINE DIAGRAM

VERIFY SCALES
BAR IS ONE INCH ON ORIGINAL DRAWING
0 1"
IF NOT ONE INCH ON THIS SHEET, ADJUST SCALES ACCORDINGLY

JOB NO. 10024A.10
DRAWING NO. 00E03-14
SHEET NO. 251 OF 498

PROJECT NO. 10024A10 FILE NAME: 10024A1003E014.dgn

Model: Layout1 ColorTable: gshade.ctb DesignScript: Carollo_Std_Pen_v0905.pen PlotScale: 1:1 Plot Date: 19-NOV-2020 11:17:12 AM User: svcPW LAST SAVED BY: mpacheco

PANEL DP-100

11/10/2020

LOCATION:	RIVER PUMP STATION	NEMA:	1
VOLTS:	480	FEED:	BOTTOM
PHASE & WIRE:	3PH 3W	MTG.	SURFACE
INTERRUPT:	65 KAIC	BUS RATING:	400
OPTIONS:	SPD	MAIN:	CB
		MAIN RATING:	400 AF 400 AT

PH A WEIGHTED VA	95138	
PH B WEIGHTED VA	95138	
PH C WEIGHTED VA	95138	
EQUIP SIZING VA	285414	
PANEL AMPS	343.3	

I/C/F	DESCRIPTION	LOAD (VA)	BKR	CIR	Ø	CIR	BKR	LOAD (VA)	DESCRIPTION	I/C/F
	SLIDE GATE NO.1	1200		1	A	2		1200	SLIDE GATE NO.2	
	G-21.0102	1200	15A-3P	3	B	4	15A-3P	1200	G-21.0103	
		1200		5	C	6		1200		
				7	A	8				
	SPARE		20A-3P	9	B	10	20A-3P		SPARE	
				11	C	12				
	SURGE TANK AIR COMPRESSOR	18000		13	A	14		9420	AIR COMPRESSOR	
	VCP-21.0701	18000	90A-3P	15	B	16	45A-3P	9420	VCP-76.0101	
		18000		17	C	18		9420		
	AIR HANDLING UNIT	22300		19	A	20		3050	AIR HANDLING UNIT	
	AHU-79.3001	22300	110A-3P	21	B	22	20A-3P	3050	AHU-79.3002	
		22300		23	C	24		3050		
	MINI POWER CENTER	5000		25	A	26		940	EXHAUST FAN (8 / 00N06-04)	
	MPC-RPS	5000	100A-3P	27	B	28	20A-3P	940	LCP-79.3001	
		5000		29	C	30		940		
				31	A	32				
	SPACE			33	B	34	20A-3P		SPARE	
				35	C	36				
				37	A	38		15000	MINI POWER CENTER	
	SPACE			39	B	40	100A-3P	15000	LP-100	
				41	C	42		15000		

PANEL LP-100

11/10/2020

LOCATION:	RIVER PUMP STATION	NEMA:	1
VOLTS:	208 / 120	FEED:	TOP
PHASE & WIRE:	3PH 4W	MTG.	PWR CNTR
INTERRUPT:	20 KAIC	BUS RATING:	150
OPTIONS:	SPD	MAIN:	MLO

PH A WEIGHTED VA	5275
PH B WEIGHTED VA	6666
PH C WEIGHTED VA	6363
EQUIP SIZING VA	19998
PANEL AMPS	55.5

I/C/F	DESCRIPTION	LOAD (VA)	BKR	CIR	Ø	CIR	BKR	LOAD (VA)	DESCRIPTION	I/C/F
	SPARE		20A-1P	1	A	2	20A-1P	1900	PUMP ROOM LIGHTING	
	BATHROOM RECEPTACLE	180	20A-1P	3	B	4	20A-1P	1440	PUMP ROOM RECEPTACLE	
	MV ELEC RM LIGHTING	700	20A-1P	5	C	6	20A-1P	150	EMERGENCY & EXIT LIGHTS	
	MV ELEC RM RECEPTACLES	720	20A-1P	7	A	8	20A-1P		SPARE	
	LV ELEC RM LIGHTING	213	20A-1P	9	B	10	20A-1P	900	OUTDOOR LIGHTING	
	LV ELEC RM RECEPTACLES	360	20A-1P	11	C	12	20A-1P	1080	OUTDOOR RECEPTACLES	
	BATHROOM FAN & LIGHTING	800	20A-1P	13	A	14	20A-1P	800	SITE LIGHTING	
	SPARE		20A-1P	15	B	16	20A-1P	800	SITE LIGHTING	
	SPARE		20A-1P	17	C	18	20A-1P	1800	CATHODIC RECTIFIER	
	SPARE		20A-1P	19	A	20	20A-1P		SPARE	
	SPARE		20A-1P	21	B	22	20A-1P	1800	PCM-20.0000 POWER	
	SPARE		20A-1P	23	C	24	20A-1P	1000	PCM-20.0000 HVAC POWER	
	SPARE		20A-1P	25	A	26	20A-1P		SPARE	
	SPARE		20A-1P	27	B	28	20A-1P		SPARE	
	SPARE		20A-1P	29	C	30	20A-1P		SPARE	
	SPARE		20A-1P	31	A	32	20A-1P		SPARE	
	SPARE		20A-1P	33	B	34	20A-1P		SPARE	
	SPARE		20A-1P	35	C	36	20A-1P		SPARE	
				37	A	38				
	BATTERY CHARGER		20A-3P	39	B	40	20A-3P		BATTERY CHARGER (SWGR-RPS)	
				41	C	42				

PANEL DD

11/10/2020

LOCATION:	CHEMICAL BUILDING	NEMA:	4X
VOLTS:	480	FEED:	BOTTOM
PHASE & WIRE:	3PH 3W	MTG.	SURFACE
INTERRUPT:	65 KAIC	BUS RATING:	100
OPTIONS:	SPD	MAIN:	CB
		MAIN RATING:	100 AF 100 AT

PH A WEIGHTED VA	13000
PH B WEIGHTED VA	13000
PH C WEIGHTED VA	13000
EQUIP SIZING VA	39000
PANEL AMPS	46.9

I/C/F	DESCRIPTION	LOAD (VA)	BKR	CIR	Ø	CIR	BKR	LOAD (VA)	DESCRIPTION	I/C/F
	PMP-25.0906A	2700		1	A	2		2700	PMP-25.0906B	
	SAMPLE PUMP 1 (3 / 00N06-03)	2700	20A-3P	3	B	4	20A-3P	2700	SAMPLE PUMP 2 (3 / 00N06-03)	
		2700		5	C	6		2700		
				7	A	8		5000		
	SPARE		20A-3P	9	B	10	30A-3P	5000	MPC-DD	
				11	C	12		5000		
				13	A	14				
	SPACE			15	B	16	20A-3P		SPARE	
				17	C	18				
				19	A	20				
	SPACE			21	B	22			SPACE	
				23	C	24				

PANEL MPC-DD

11/10/2020

LOCATION:	DELTA DIABLO WTP	NEMA:	4X
VOLTS:	208 / 120	FEED:	BOTTOM
PHASE & WIRE:	3PH 4W	MTG.	PWR CNTR
INTERRUPT:	65 KAIC	BUS RATING:	100
OPTIONS:	SPD	MAIN:	CB
		MAIN RATING:	100 AF 100 AT

PH A WEIGHTED VA	2950
PH B WEIGHTED VA	2700
PH C WEIGHTED VA	125
EQUIP SIZING VA	8850
PANEL AMPS	24.6

I/C/F	DESCRIPTION	LOAD (VA)	BKR	CIR	Ø	CIR	BKR	LOAD (VA)	DESCRIPTION	I/C/F
	PUMP PAD LIGHTING	200	20A-1P	1	A	2	20A-1P	1800	PCM-25.0904 POWER	
	PUMP PAD RECEPTACLES	360	20A-1P	3	B	4	20A-1P	1800	PCM-25.0904 FAN, LIGHTING & RECEPTACLE	
	PLC PAD LIGHTING	100	20A-1P	5	C	6	20A-1P		SPARE	
	PLC PAD RECEPTACLES	360	20A-1P	7	A	8	20A-1P		SPARE	
	SPARE		20A-1P	9	B	10	20A-1P		SPARE	
	SPARE		20A-1P	11	C	12	20A-1P		SPARE	
	SPARE		20A-1P	13	A	14	20A-1P		SPARE	
	SPACE			15	B	16			SPACE	
	SPACE			17	C	18			SPACE	
	SPACE			19	A	20			SPACE	
	SPACE			21	B	22			SPACE	
	SPACE			23	C	24			SPACE	

PANEL LP-RO

11/19/2020

LOCATION:	RO ELECTRICAL RM	NEMA:	12
VOLTS:	208 / 120	FEED:	BOTTOM
PHASE & WIRE:	3PH 4W	MTG.	PWR CNTR
INTERRUPT:	65 KAIC	BUS RATING:	150
OPTIONS:	SPD	MAIN:	CB
		MAIN RATING	150 AF 150 AT

PH A WEIGHTED VA	13231
PH B WEIGHTED VA	8120
PH C WEIGHTED VA	6493
EQUIP SIZING VA	39693
PANEL AMPS	110.2

I/C/F	DESCRIPTION	LOAD (VA)	BKR	CIR	Ø	CIR	BKR	LOAD (VA)	DESCRIPTION	I/C/F
	TRANSFORMER PAD LIGHTING & RECEPTACLE	250	20A-1P	1	A	2	30A-1P	2800	PLC-25.0000 POWER	
	ELEC ROOM LIGHTING	996	20A-1P	3	B	4	20A-1P	1800	PLC-25.0000 HVAC POWER	
	ELEC ROOM RECEPTACLES	720	20A-1P	5	C	6	20A-1P	60	EXIT LIGHTS	
	PUMP ROOM LIGHTING	4867	60A-1P	7	A	8	20A-1P	948	OUTDOOR LIGHTING	
	PUMP ROOM RECEPTACLES	1620	20A-1P	9	B	10	20A-1P	1080	OUTDOOR RECEPTACLE	
	HVAC ROOM LIGHTING	664	20A-1P	11	C	12	20A-1P		SPARE	
	HVAC ROOM RECEPTACLES	720	20A-1P	13	A	14	20A-1P		SPARE	
	SPARE		20A-1P	15	B	16	20A-1P		SPARE	
	SPARE		20A-1P	17	C	18	20A-1P		SPARE	
	SPARE		20A-1P	19	A	20	20A-1P		SPARE	
	SPARE		20A-1P	21	B	22	20A-1P		SPARE	
	SPARE		20A-1P	23	C	24	20A-1P		SPARE	
	SPACE			25	A	26			SPACE	
	SPACE			27	B	28			SPACE	
	SPACE			29	C	30	30A-1P	2750	PLANT A SITE LIGHTING	
2	SPACE			31	A	32			SPACE	
	SPACE			33	B	34			SPACE	
	SPACE			35	C	36			SPACE	
	SPACE			37	A	38		1000	AIR COMPRESSOR	
	SPACE			39	B	40	20A-3P	1000	ARC-25.0005	
	SPACE			41	C	42		1000		

PANEL MPC-F1

11/10/2020

LOCATION:	BRACKISH FILTERED WATER PS ELECTRICAL PA	NEMA:	4X
VOLTS:	208 / 120	FEED:	BOTTOM
PHASE & WIRE:	3PH 4W	MTG.	PWR CNTR
INTERRUPT:	65 KAIC	BUS RATING:	150
OPTIONS:	SPD	MAIN:	CB
		MAIN RATING	150 AF 150 AT

PH A WEIGHTED VA	11250
PH B WEIGHTED VA	11475
PH C WEIGHTED VA	11475
EQUIP SIZING VA	34425
PANEL AMPS	95.6

I/C/F	DESCRIPTION	LOAD (VA)	BKR	CIR	Ø	CIR	BKR	LOAD (VA)	DESCRIPTION	I/C/F
	GENERATOR PAD LIGHTING	200	20A-1P	1	A	2	20A-1P	800	ELECTRICAL PAD LIGHTING	
	GENERATOR PAD RECEPTACLES	360	20A-1P	3	B	4	20A-1P	1260	ELECTRICAL PAD RECEPTACLES	
	SPARE		20A-1P	5	C	6	20A-1P	1800	PCM-25.0001 POWER	
	SPARE		20A-1P	7	A	8	30A-1P	2000	PCM-25.0001 HVAC POWER	
	SPARE		20A-1P	9	B	10	20A-1P	360	NAOH HEAT TRACE PANEL	
	SPARE		20A-1P	11	C	12	20A-1P	180	NAHSO3 HEAT TRACE PANEL	
		2000		13	A	14	20A-1P		SPARE	
	SWGR-C2 BATTERY CHARGER (FUTURE)	2000	30A-3P	15	B	16	20A-1P	1200	PMP-24.0002	
		2000		17	C	18	20A-1P	1200	PMP-21.0602	
		2000		19	A	20		2000		
	SWGR-C1 BATTERY CHARGER	2000	30A-3P	21	B	22	30A-3P	2000	MAIN PANEL BATTERY CHARGER	
		2000		23	C	24		2000		
	SPARE		20A-1P	25	A	26	20A-1P		SPARE	
	SPARE		20A-1P	27	B	28	20A-1P		SPARE	
	SPARE		20A-1P	29	C	30	20A-1P		SPARE	
	SPACE			31	A	32			SPACE	
	SPACE			33	B	34			SPACE	
	SPACE			35	C	36			SPACE	
	SPACE			37	A	38			SPACE	
	SPACE			39	B	40			SPACE	
1	SPACE			41	C	42			SPACE	

REV	DATE	BY	DESCRIPTION
2	11-19-20	AB	REVISED PER ADDENDUM NO.6
1	11-10-20	AB	REVISED PER ADDENDUM NO.4

DESIGNED AB
DRAWN BPR
CHECKED JGB
DATE SEPTEMBER 2020

Digitally signed by Ashritha Banapuram
Contact Info: Carollo Engineers, Inc.
Date: 2020.11.20 10:56:25-08'00'

REGISTERED PROFESSIONAL ENGINEER ASHRITHA BANAPURAM No. 21815 ELECTRICAL STATE OF CALIFORNIA

carollo

ANTIOCH CALIFORNIA OPPORTUNITY LIVES·HERE

CITY OF ANTIOCH
ANTIOCH BRACKISH WATER DESALINATION PROJECT
ELECTRICAL
PANELBOARD SCHEDULES - 1

VERIFY SCALES
BAR IS ONE INCH ON ORIGINAL DRAWING
0 1"
IF NOT ONE INCH ON THIS SHEET, ADJUST SCALES ACCORDINGLY

JOB NO. 10024A.10
DRAWING NO. 00E04-01
SHEET NO. 253 OF 498

LAST SAVED BY: mpacheco Model: Layout1 ColorTable: gshade.ctb DesignScript: Carollo_Std_Pen_v0905.pen PlotScale: 1:1 User: svcPW Plot Date: 19-NOV-2020 11:17:10 AM

PANEL DP-RO

11/19/2020

LOCATION:	RO ELECTRICAL RM	NEMA:	1	PH A WEIGHTED VA	153100
VOLTS:	480	FEED:	TOP	PH B WEIGHTED VA	153100
PHASE & WIRE:	3PH 3W	MTG.	SURFACE	PH C WEIGHTED VA	153100
INTERRUPT:	65 KAIC	BUS RATING:	800		
OPTIONS:	SPD	MAIN:	MLO	EQUIP SIZING VA	459300
				PANEL AMPS	552.5

I/C/F	DESCRIPTION	LOAD (VA)	BKR	CIR	Ø	CIR	BKR	LOAD (VA)	DESCRIPTION	I/C/F
I	RO TRAIN NO.4 VALVES	2400		1	A	2		2400	RO TRAIN NO.2 VALVES	I
I	VAL-25.0401A, VAL-25.0401B	2400	15A-3P	3	B	4	15A-3P	2400	VAL-25.0201A, VAL-25.0201B	I
I		2400		5	C	6		2400		I
I	RO TRAIN NO.3 VALVES	2400		7	A	8		2400	RO TRAIN NO.1 VALVES	I
I	VAL-25.0301A, VAL-25.0301B	2400	15A-3P	9	B	10	15A-3P	2400	VAL-25.0101A, VAL-25.0101B	I
I		2400		11	C	12		2400		I
I	LONE TREE WAY VALVES	2400		13	A	14		2400	RO CIP VALVES	I
I	VAL-21.0601A, VAL-21.0601B	2400	20A-3P	15	B	16	15A-3P	2400	VAL-25.0007A, VAL-25.0008A	I
I		2400		17	C	18		2400		I
I	FLOWMETER PAD VALVES	2400		19	A	20		2400	FLUSH SYSTEM VALVES	I
I	VAL-21.0602E, VAL-21.0602F	2400	20A-3P	21	B	22	20A-3P	2400	VAL-25.0903A, VAL-25.0903E	I
I		2400		23	C	24		2400		I
I	POLYMER SYSTEM	1700		25	A	26		35000		C
I	VCP-61.1110	1700	20A-3P	27	B	28	175A-3P	35000	TWH-25.0001	C
I		1700		29	C	30		35000		C
I		2400		31	A	32		0		
I	RO TRAIN NO.1 & 2 VALVES (FBV)	2400	20A-3P	33	B	34	175A-3P	0	TWH-25.0002 (STANDBY)	
I		2400		35	C	36		0		
I		2400		37	A	38		35000		C
I	RO TRAIN NO.3 & 4 VALVES (FBV)	2400	20A-3P	39	B	40	175A-3P	35000	TWH-25.0003	C
I		2400		41	C	42		35000		C
I		2400		43	A	44				
I	VAL-26.0301A, VAL-26.0301B	2400	20A-3P	45	B	46	175A-3P		SPARE	
I		2400		47	C	48				
				49	A	50				
	SPACE		20A-3P	51	B	52	20A-3P		SPARE	
				53	C	54				
C		15000		55	A	56		15000		C
C	LP-RO	15000	125A-3P	57	B	58	125A-3P	15000	MPC-CHEM	C
C		15000		59	C	60		15000		C

2

PANEL DP-A

11/10/2020

LOCATION:	PLANT A FILTER GALLERY	NEMA:	4X	PH A WEIGHTED VA	8000
VOLTS:	480	FEED:	TOP	PH B WEIGHTED VA	8000
PHASE & WIRE:	3PH 3W	MTG.	SURFACE	PH C WEIGHTED VA	8000
INTERRUPT:	65 KAIC	BUS RATING:	100		
OPTIONS:	SPD	MAIN:	CB	EQUIP SIZING VA	24000
		MAIN RATING:	100 AF 100 AT	PANEL AMPS	28.9

I/C/F	DESCRIPTION	LOAD (VA)	BKR	CIR	Ø	CIR	BKR	LOAD (VA)	DESCRIPTION	I/C/F
	FILTER 1 GATES	800		1	A	2		800	FILTER 2 GATES	
	VAL-24.0102A, VAL-24.0102B,	800	20A-3P	3	B	4	20A-3P	800	VAL-24.0202A, VAL-24.0202B,	
	VAL-24.0104A, VAL-24.0104B	800		5	C	6		800	VAL-24.0204A, VAL-24.0204B	
	FILTER 3 GATES	800		7	A	8		800	FILTER 4 GATES	
	VAL-24.0302A, VAL-24.0302B,	800	20A-3P	9	B	10	20A-3P	800	VAL-24.0402A, VAL-24.0402B,	
	VAL-24.0304A, VAL-24.0304B	800		11	C	12		800	VAL-24.0404A, VAL-24.0404B	
	FILTER 5 GATES	800		13	A	14		800	FILTER 6 GATES	
	VAL-24.0502A, VAL-24.0502B,	800	20A-3P	15	B	16	20A-3P	800	VAL-24.0602A, VAL-24.0602B,	
	VAL-24.0504A, VAL-24.0504B	800		17	C	18		800	VAL-24.0604A, VAL-24.0604B	
	FILTER 7 GATES	800		19	A	20		800	FILTER 8 GATES	
	VAL-24.0702A, VAL-24.0702B,	800	20A-3P	21	B	22	20A-3P	800	VAL-24.0802A, VAL-24.0802B,	
	VAL-24.0704A, VAL-24.0704B	800		23	C	24		800	VAL-24.0804A, VAL-24.0804B	
				25	A	26				
	SPACE			27	B	28	20A-3P		SPARE	
				29	C	30				
				31	A	32				
	SPACE			33	B	34	20A-3P		SPARE	
				35	C	36				
				37	A	38				
	SPACE			39	B	40	20A-3P		SPARE	
				41	C	42				

1

PANEL MPC-RPS

11/10/2020

LOCATION:	EXISTING RIVER PUMP STATION BUILDING	NEMA:	4X	PH A WEIGHTED VA	0
VOLTS:	240 / 120	FEED:	TOP	PH B WEIGHTED VA	0
PHASE & WIRE:	1PH 3W	MTG.	PWR CNTR		
INTERRUPT:	18 KAIC	BUS RATING:	100		
OPTIONS:	SPD	MAIN:	CB	EQUIP SIZING VA	0
		MAIN RATING:	100 AF 100 AT	PANEL AMPS	0.0

I/C/F	DESCRIPTION	LOAD (VA)	BKR	CIR	Ø	CIR	BKR	LOAD (VA)	DESCRIPTION	I/C/F
	EXISTING LIGHTING		20A-1P	1	A	2	100A-2P		EXISTING DWR PANEL	
	EXISTING LIGHTING		20A-1P	3	B	4				
	EXISTING RECEPTACLE		20A-1P	5	A	6	20A-1P		SPARE	
	EXISTING RECEPTACLE		20A-1P	7	B	8	20A-1P		SPARE	
	SPARE		20A-1P	9	A	10	20A-1P		SPARE	
	SPARE		20A-1P	11	B	12	20A-1P		SPARE	
	SPARE		20A-1P	13	A	14	20A-1P		SPARE	
	SPARE		20A-1P	15	B	16	20A-1P		SPARE	
	SPARE		20A-1P	17	A	18	20A-1P		SPARE	

PANEL MPC-CHEM

11/10/2020

LOCATION:	CHEMICAL FACILITY	NEMA:	4X	PH A WEIGHTED VA	6089
VOLTS:	208 / 120	FEED:	BOTTOM	PH B WEIGHTED VA	10763
PHASE & WIRE:	3PH 4W	MTG.	PWR CNTR	PH C WEIGHTED VA	10488
INTERRUPT:	22 KAIC	BUS RATING:	150		
OPTIONS:	SPD	MAIN:	CB	EQUIP SIZING VA	32289
		MAIN RATING	150 AF 150 AT	PANEL AMPS	89.6

I/C/F	DESCRIPTION	LOAD (VA)	BKR	CIR	Ø	CIR	BKR	LOAD (VA)	DESCRIPTION	I/C/F
	PMP-65.0201	180	20A-1P	1	A	2	20A-1P	180	PMP-66.0901	
	PMP-65.0202	180	20A-1P	3	B	4	20A-1P	180	PMP-66.0902	
	PMP-69.0101	180	20A-1P	5	C	6	20A-1P	225	PMP-66.0801	
	PMP-65.0102	180	20A-1P	7	A	8	20A-1P	225	PMP-66.0802	
	PMP-66.0804	225	20A-1P	9	B	10	20A-1P	225	PMP-66.0803	
	PMP-66.0805	225	20A-1P	11	C	12	20A-1P	900	CALCIUM CHLORIDE AREA LIGHTING	
	LCP-66.0806	250	20A-1P	13	A	14	20A-1P	720	CALCIUM CHLORIDE AREA RECEPTACLE	
	RECTIFIER ENCLOSURE	1800	20A-1P	15	B	16	20A-1P	600	SODIUM BISULFITE AREA LIGHTING	
	POLYMER AREA LIGHTING	300	20A-1P	17	C	18	20A-1P	540	SODIUM BISULFITE AREA RECEPTACLE	
	POLYMER AREA RECEPTACLE	360	20A-1P	19	A	20	20A-1P	600	SULPHURIC AREA LIGHTING	
	HEAT TRACING	1800	40A-2P	21	B	22	20A-1P	540	SULPHURIC AREA RECEPTACLE	
		1800		23	C	24	20A-1P	40	EXIT LIGHTS	
	VAL-66.0801E	180	20A-1P	25	A	26	20A-1P	316	OUTDOOR LIGHTING	
	VAL-66.0901F	180	20A-1P	27	B	28	30A-1P	900	OUTDOOR RECEPTACLE	
	BLANKET HEATER RECEPTACLE	180	20A-1P	29	C	30	20A-1P	2000	SODIUM BISULFITE HEATING BLACKET RECEPTACLE	
	POLYMER SYSTEM VACUUM RECEPTACLE	1500	20A-1P	31	A	32	20A-1P	180	PMP-61.1101	
	SPARE		20A-1P	33	B	34	20A-1P	180	PMP-61.1102	
	SPARE		20A-1P	35	C	36	20A-1P		SPARE	
	SPARE		20A-1P	37	A	38	20A-1P		SPARE	
	SPARE		20A-1P	39	B	40	20A-1P	1800	PCM-60.0000 POWER	
	SPARE		20A-1P	41	C	42	30A-1P	2000	PCM-60.0000 HVAC POWER	

REV	DATE	BY	DESCRIPTION
2	11-19-20	AB	REVISED PER ADDENDUM NO.6
1	11-10-20	AB	REVISED PER ADDENDUM NO.4

DESIGNED AB
DRAWN BPR
CHECKED JGB
DATE SEPTEMBER 2020

Digitally signed by Ashritha Banapuram
Contact Info: Carollo Engineers, Inc.
Date: 2020.11.23 10:54:49 -08'00'

REGISTERED PROFESSIONAL ENGINEER ASHRITHA BANAPURAM No. 21815 ELECTRICAL STATE OF CALIFORNIA

carollo

ANTIOCH CALIFORNIA OPPORTUNITY LIVES·HERE

CITY OF ANTIOCH
ANTIOCH BRACKISH WATER DESALINATION PROJECT
ELECTRICAL
PANELBOARD SCHEDULES - 2

VERIFY SCALES
BAR IS ONE INCH ON ORIGINAL DRAWING
0 1"
IF NOT ONE INCH ON THIS SHEET, ADJUST SCALES ACCORDINGLY

JOB NO. 10024A.10
DRAWING NO. 00E04-02
SHEET NO. 254 OF 498

LAST SAVED BY: mpacheco Model: Layout1 ColorTable: gshade.ctb DesignScript: Carollo_Std_Pen_v0905.pen PlotScale: 1:1 User: svcPW Plot Date: 19-NOV-2020 11:17:11 AM

GENERAL NOTES:

1. CONSTRUCT DUCT BANK IN ACCORDANCE WITH EM001 UNLESS OTHERWISE INDICATED.

KEY NOTES:

1. USE CONDUIT FOR LIGHTING AND RECEPTACLE WIRING.

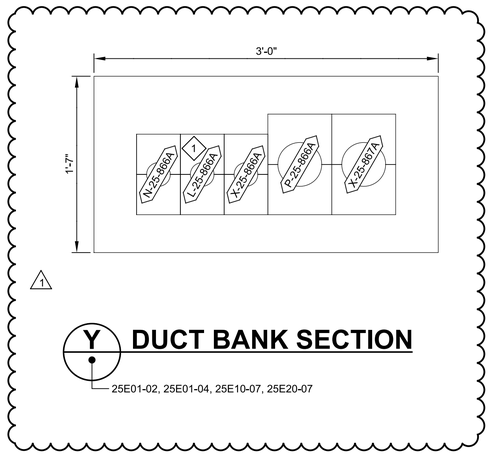

Y DUCT BANK SECTION

25E01-02, 25E01-04, 25E10-07, 25E20-07

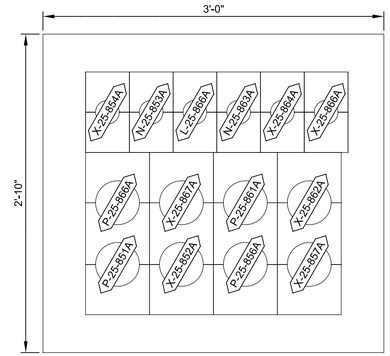

Z DUCT BANK SECTION

25E01-04

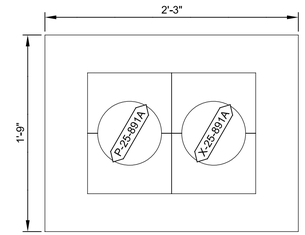

DD DUCT BANK SECTION

25E01-02

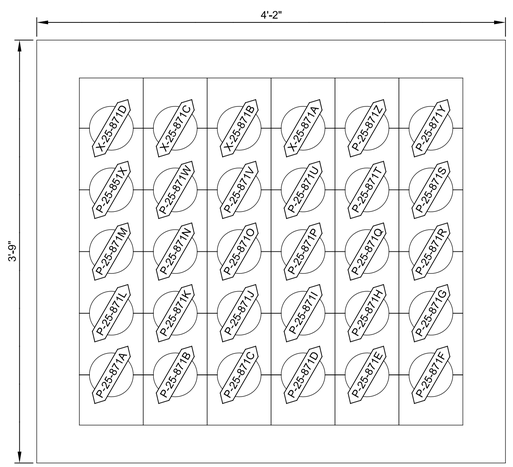

AA DUCT BANK SECTION

25E01-05, 25E15-01, 25E20-01, 25E25-01

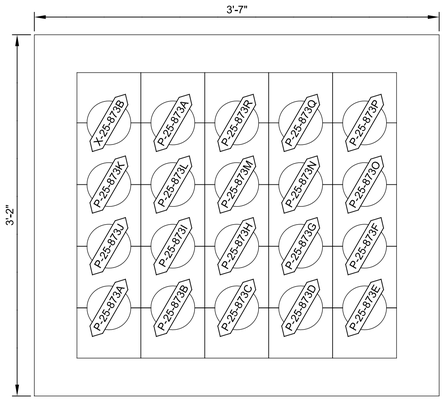

BB DUCT BANK SECTION

25E01-05, 25E15-01, 25E20-01, 25E25-01

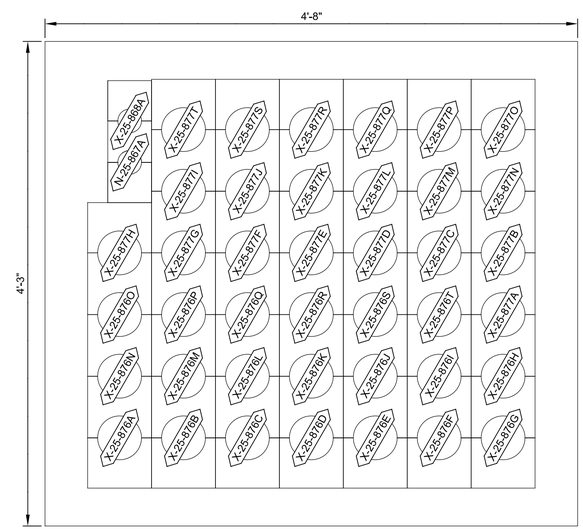

CC DUCT BANK SECTION

25E01-05, 25E15-01, 25E20-01, 25E25-01

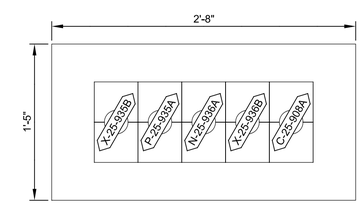

EE DUCT BANK SECTION

25E10-09

REV	DATE	BY	DESCRIPTION
1	11-19-20	AB	REVISED PER ADDENDUM NO.6

DESIGNED AB
DRAWN JRS
CHECKED JGB
DATE SEPTEMBER 2020

Digitally signed by Ashritha Banapuram
Contact Info: Carollo Engineers, Inc.
Date: 2020.11.20 10:54:23-08'00'

REGISTERED PROFESSIONAL ENGINEER ASHRITHA BANAPURAM No. 21815 ELECTRICAL STATE OF CALIFORNIA

carollo

ANTIOCH CALIFORNIA OPPORTUNITY LIVES·HERE

CITY OF ANTIOCH
ANTIOCH BRACKISH WATER DESALINATION PROJECT
ELECTRICAL
DUCT BANK SECTIONS - 3

VERIFY SCALES
BAR IS ONE INCH ON ORIGINAL DRAWING
0 1"
IF NOT ONE INCH ON THIS SHEET, ADJUST SCALES ACCORDINGLY

JOB NO. 10024A.10
DRAWING NO. 00E05-03
SHEET NO. 259 OF 498

LAST SAVED BY: mpacheco Model: Layout1 ColorTable: gshade.ctb DesignScript: Carollo_Std_Pen_v0905.pen PlotScale: 1:1 User: svcPW Plot Date: 19-NOV-2020 10:27:12 AM

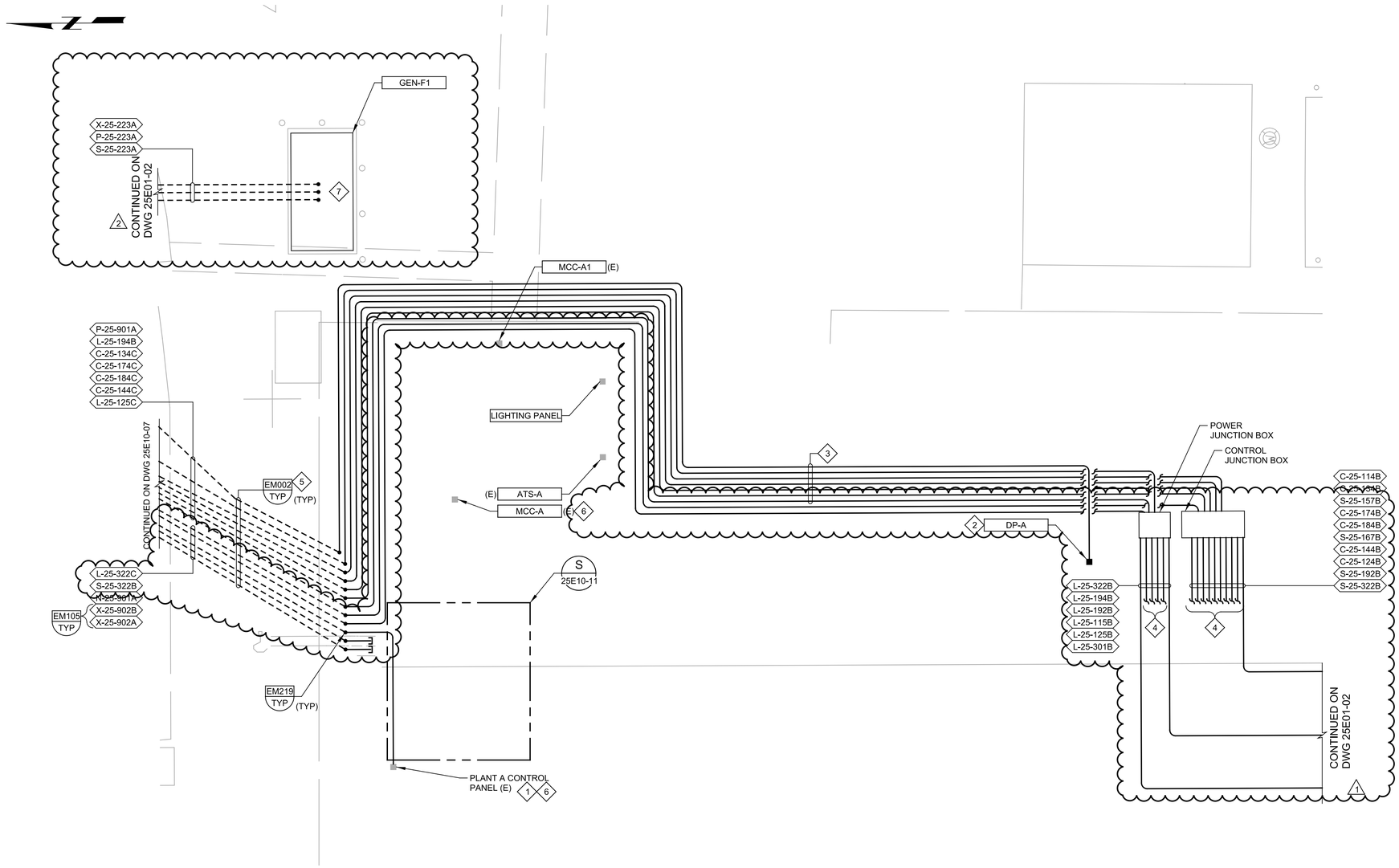

KEY NOTES:

1. COORDINATE WITH CLIENT TO IDENTIFY THE EXACT LOCATION OF THE CONTROL PANEL IN THE CONTROL ROOM.
2. WALL MOUNT THE PANELBOARD ON THE UPPER LEVEL OF THE FILTER GALLERY NEXT TO THE OPENING.
3. RUN THE CONDUITS ALONG THE EXTERIOR OF THE BUILDING.
4. USE THE OPENING IN THE FLOOR TO CONTINUE THE CONDUITS INTO THE FILTER GALLERY.
5. INSTALL A SHALLOW DUCT BANK TO AVOID CONFLICTS WITH UNDERGROUND UTILITIES. STUB UP THE CONDUITS OUTSIDE THE PLANT A BUILDING AND CONTINUE UP THE WALL.
6. DISCONNECT AND DEMOLISH EXISTING POWER AND CONTROL CABLES TO THE FLASH MIXER.REUSE EXISTING CONDUITS TO INSTALL NEW CABLES TO THE NEW MIXER CONTROL PANEL. (1)
7. COORDINATE THE LOCATION OF CONDUIT STUB UPS WITH THE GENERATOR MANUFACTURER. (2)

B PLAN
25E01-02
SCALE: 3/16" = 1'-0"
FILE: 10024A1025E101

REV	DATE	BY	DESCRIPTION
2	11-19-20	AB	REVISED PER ADDENDUM NO.6
1	11-10-20	AB	REVISED PER ADDENDUM NO.4

DESIGNED AB
DRAWN MNH
CHECKED JGB
DATE SEPTEMBER 2020

Digitally signed by Ashritha Banapuram
Contact Info: Carollo Engineers, Inc.
Date: 2020.11.20 10:55:27 -08'00'

REGISTERED PROFESSIONAL ENGINEER ASHRITHA BANAPURAM No. 21815 ELECTRICAL STATE OF CALIFORNIA

carollo

ANTIOCH CALIFORNIA OPPORTUNITY LIVES•HERE

CITY OF ANTIOCH
ANTIOCH BRACKISH WATER DESALINATION PROJECT
ELECTRICAL
SITE PLAN - 2

VERIFY SCALES
BAR IS ONE INCH ON ORIGINAL DRAWING
0 1"
IF NOT ONE INCH ON THIS SHEET, ADJUST SCALES ACCORDINGLY

JOB NO. 10024A.10
DRAWING NO. 25E01-03
SHEET NO. 274 OF 498

Plot Date: 20-NOV-2020 9:14:00 AM
User: svcPW
PlotScale: 1:1
DesignScript: Carollo_Std_Pen_v0905.pen
ColorTable: gshade.ctb
Model: Layout1
LAST SAVED BY: mpacheco

CONDUIT SCHEDULE AREA 25

11/19/20

BRACKISH WATER DESALINATION PROJECT

WATER TREATMENT PLANT

CONDUIT			CONDUCTORS			GROUND				
NUMBER	DWG	SIZE	#	SIZE	TYPE	#	SIZE	TYPE	DESCRIPTION	CONNECTING SEGMENTS
P-25-201A	25E10-06	3.5"	1 2 2	3/C-#4/0:VFD #12 #14	VFD XHHW-2 XHHW-2		#3	INTEGRAL	FR: PMP-25.0001 TO: JUNCTION BOX 1 3/C-#4/0:VFD >> PMP-25.0001 POWER 2 #12 >> MWH-25.0001 POWER 2 #14 >> TSH-25.0001 CONTROL	
P-25-201B	25E10-06 25E10-07	3"	1	3/C-#4/0:VFD	VFD		#3	INTEGRAL	FR: JUNCTION BOX TO: VFD-25.0001 1 3/C-#4/0:VFD >> PMP-25.0001 POWER	
P-25-201C	25E10-07	2.5"	3	350	XHHW-2	1	#4	XHHW-2	FR: VFD-25.0001 TO: SWBD-F1 3 350 >> VFD-25.0001 POWER	
P-25-201D	25E10-07	2.5"	1	PULL	ROPE		#4		FR: VFD-25.0001 TO: SWBD-F1 1 PULL >> SPARE	
P-25-202A	25E10-06	3.5"	1 2 2	3/C-#4/0:VFD #12 #14	VFD XHHW-2 XHHW-2		#3	INTEGRAL	FR: PMP-25.0002 TO: JUNCTION BOX 1 3/C-#4/0:VFD >> PMP-25.0002 POWER 2 #12 >> MWH-25.0002 POWER 2 #14 >> TSH-25.0002 CONTROL	
P-25-202B	25E10-06 25E10-07	3"	1	3/C-#4/0:VFD	VFD		#3	INTEGRAL	FR: JUNCTION BOX TO: VFD-25.0002 1 3/C-#4/0:VFD >> PMP-25.0002 POWER	
P-25-202C	25E10-07	2.5"	3	350	XHHW-2	1	#4	XHHW-2	FR: VFD-25.0002 TO: SWBD-F1 3 350 >> VFD-25.0002 POWER	
P-25-202D	25E10-07	2.5"	1	PULL	ROPE		#4		FR: VFD-25.0002 TO: SWBD-F1 1 PULL >> SPARE	
P-25-203A	25E10-06	3.5"	1 2 2	3/C-#4/0:VFD #12 #14	VFD XHHW-2 XHHW-2		#3	INTEGRAL	FR: PMP-25.0003 TO: JUNCTION BOX 1 3/C-#4/0:VFD >> PMP-25.0003 POWER 2 #12 >> MWH-25.0003 POWER 2 #14 >> TSH-25.0003 CONTROL	
P-25-203B	25E10-06 25E10-07	3"	1	3/C-#4/0:VFD	VFD		#3	INTEGRAL	FR: JUNCTION BOX TO: VFD-25.0003 1 3/C-#4/0:VFD >> PMP-25.0003 POWER	
P-25-203C	25E10-07	2.5"	3	350	XHHW-2	1	#4	XHHW-2	FR: VFD-25.0003 TO: SWBD-F1 3 350 >> VFD-25.0003 POWER	
P-25-203D	25E10-07	2.5"	1	PULL	ROPE		#4		FR: VFD-25.0003 TO: SWBD-F1 1 PULL >> SPARE	
P-25-204B	25E10-06 25E10-07	3"	1	PULL	ROPE		#3		FR: CLEARWELL TO: VFD-25.0004 (FUTURE) 1 PULL >> SPARE	
P-25-204C	25E10-07	2.5"	1	PULL	ROPE		#4		FR: VFD-25.0004 (FUTURE) TO: SWBD-F1 1 PULL >> SPARE	
P-25-204D	25E10-07	2.5"	1	PULL	ROPE		#4		FR: VFD-25.0004 (FUTURE) TO: SWBD-F1 1 PULL >> SPARE	
P-25-210A	25E01-02	1"	3	#12	XHHW-2	1	#12	XHHW-2	FR: G-25.0004A TO: DISCONNECT 3 #12 >> G-25.0004A POWER	
P-25-210B	25E01-02	1"	3	#12	XHHW-2	1	#12	XHHW-2	FR: DISCONNECT TO: CONDUIT TEE 3 #12 >> G-25.0004A POWER	P-25-214C
P-25-211A	25E10-06	0.75"	3	#12	XHHW-2	1	#12	XHHW-2	FR: VAL-25.0001F TO: DISCONNECT 3 #12 >> VAL-25.0001F POWER	
P-25-211B	25E10-06 25E10-07	1"	3	#12	XHHW-2	1	#12	XHHW-2	FR: DISCONNECT TO: SWBD-F1 3 #12 >> VAL-25.0001F POWER	

1

CONDUIT SCHEDULE AREA 25

11/19/20

BRACKISH WATER DESALINATION PROJECT

WATER TREATMENT PLANT

CONDUIT			CONDUCTORS			GROUND				
NUMBER	DWG	SIZE	#	SIZE	TYPE	#	SIZE	TYPE	DESCRIPTION	CONNECTING SEGMENTS
P-25-212A	25E10-06	0.75"	3	#12	XHHW-2	1	#12	XHHW-2	FR: G-25.0004B TO: DISCONNECT 3 #12 >> G-25.0004B POWER	
P-25-212B	25E10-06	0.75"	3	#12	XHHW-2	1	#12	XHHW-2	FR: DISCONNECT TO: CONDUIT TEE 3 #12 >> G-25.0004B POWER	P-25-213C
P-25-213A	25E10-06	0.75"	3	#12	XHHW-2	1	#12	XHHW-2	FR: G-25.0004F TO: DISCONNECT 3 #12 >> G-25.0004F POWER	
P-25-213B	25E10-06	0.75"	3	#12	XHHW-2	1	#12	XHHW-2	FR: DISCONNECT TO: CONDUIT TEE 3 #12 >> G-25.0004F POWER	P-25-213C
P-25-213C	25E10-06 25E10-07	1"	6	#12	XHHW-2	1	#12	XHHW-2	FR: CONDUIT TEE TO: SWBD-F1 3 #12 >> G-25.0004B POWER 3 #12 >> G-25.0004F POWER	 P-25-212B P-25-213B
P-25-214A	25E01-02	0.75"	3	#12	XHHW-2	1	#12	XHHW-2	FR: G-25.0004E TO: DISCONNECT 3 #12 >> G-25.0004E POWER	
P-25-214B	25E01-02	0.75"	3	#12	XHHW-2	1	#12	XHHW-2	FR: DISCONNECT TO: CONDUIT TEE 3 #12 >> G-25.0004E POWER	P-25-214C
P-25-214C	25E01-02 25E10-06 25E10-07	0.75"	6	#12	XHHW-2	1	#12	XHHW-2	FR: CONDUIT TEE TO: SWBD-F1 3 #12 >> G-25.0004A POWER 3 #12 >> G-25.0004E POWER	 P-25-210B P-25-214B
P-25-215A	25E01-02	0.75"	3	#12	XHHW-2	1	#12	XHHW-2	FR: G-25.0004D TO: DISCONNECT 3 #12 >> G-25.0004D POWER	
P-25-215B	25E01-02 25E10-06 25E10-07	0.75"	3	#12	XHHW-2	1	#12	XHHW-2	FR: DISCONNECT TO: SWBD-F1 3 #12 >> G-25.0004D POWER	
P-25-216A	25E10-06	0.75"	3	#12	XHHW-2	1	#12	XHHW-2	FR: G-25.0004C TO: DISCONNECT 3 #12 >> G-25.0004C POWER	
P-25-216B	25E10-06 25E10-07	0.75"	3	#12	XHHW-2	1	#12	XHHW-2	FR: DISCONNECT TO: SWBD-F1 3 #12 >> G-25.0004C POWER	
P-25-219A	25E10-06 25E10-07	1"	3	#12	XHHW-2	1	#12	XHHW-2	FR: PMP-25.0020A TO: LCP-25.0020A 3 #12 >> PMP-25.0020A POWER	
P-25-219B	25E10-07	0.75"	3	#12	XHHW-2	1	#12	XHHW-2	FR: LCP-25.0020A TO: SWBD-F1 3 #12 >> PMP-25.0020A POWER	
P-25-220A	25E10-06 25E10-07	1"	3	#12	XHHW-2	1	#12	XHHW-2	FR: PMP-25.0020 TO: LCP-25.0020 3 #12 >> PMP-25.0020 POWER	
P-25-220B	25E10-07	0.75"	3	#12	XHHW-2	1	#12	XHHW-2	FR: LCP-25.0020 TO: SWBD-F1 3 #12 >> PMP-25.0020 POWER	
P-25-221A	25E10-07	4"	3	750	XHHW-2	1	#4/0	XHHW-2	FR: ATS-F1 TO: XFMR-F1 3 750 >> ATS-F1 POWER	
P-25-221B	25E10-07	4"	3	750	XHHW-2	1	#4/0	XHHW-2	FR: ATS-F1 TO: XFMR-F1 3 750 >> ATS-F1 POWER	
P-25-221C	25E10-07	4"	3	750	XHHW-2	1	#4/0	XHHW-2	FR: ATS-F1 TO: 2 XFMR-F1 3 750 >> ATS-F1 POWER	
P-25-221D	25E10-07	4"	3	750	XHHW-2	1	#4/0	XHHW-2	FR: ATS-F1 TO: XFMR-F1 3 750 >> ATS-F1 POWER	

REV	DATE	BY	DESCRIPTION
2	11-19-20	AB	REVISED PER ADDENDUM NO.6
1	11-10-20	AB	REVISED PER ADDENDUM NO.4

DESIGNED AB
DRAWN BPR
CHECKED JGB
DATE SEPTEMBER 2020

Digitally signed by Ashritha Banapuram
Contact Info: Carollo Engineers, Inc.
Date: 2020.11.20 10:57:20 -08'00'

REGISTERED PROFESSIONAL ENGINEER ASHRITHA BANAPURAM No. 21815 ELECTRICAL STATE OF CALIFORNIA

carollo

ANTIOCH CALIFORNIA OPPORTUNITY LIVES·HERE

CITY OF ANTIOCH

ANTIOCH BRACKISH WATER DESALINATION PROJECT

ELECTRICAL

WATER TREATMENT PLANT
CONDUIT SCHEDULE - 16

VERIFY SCALES
BAR IS ONE INCH ON ORIGINAL DRAWING
0 1"
IF NOT ONE INCH ON THIS SHEET, ADJUST SCALES ACCORDINGLY

JOB NO. 10024A.10
DRAWING NO. 25E05-16
SHEET NO. 293 OF 498

Plot Date: 19-NOV-2020 3:20:55 PM
User: svcPW
PlotScale: 1:1
DesignScript: Carollo_Std_Pen_v0905.pen
ColorTable: gshade.ctb
Model: Layout1
LAST SAVED BY: mpacheco

CONDUIT SCHEDULE AREA 25

11/19/20

BRACKISH WATER DESALINATION PROJECT

WATER TREATMENT PLANT

CONDUIT			CONDUCTORS			GROUND							
NUMBER	DWG	SIZE	#	SIZE	TYPE	#	SIZE	TYPE		DESCRIPTION			CONNECTING SEGMENTS
P-25--222A	25E10-07	4"	3	750	XHHW-2	1	#4/0	XHHW-2	FR:	SWBD-F1			
									TO:	ATS-F1			
									3	750	>>	SWBD-F1 POWER	
P-25-222B	25E10-07	4"	3	750	XHHW-2	1	#4/0	XHHW-2	FR:	SWBD-F1			
									TO:	ATS-F1			
									3	750	>>	SWBD-F1 POWER	
P-25-222C	25E10-07	4"	3	750	XHHW-2	1	#4/0	XHHW-2	FR:	SWBD-F1			
									TO:	ATS-F1			
									3	750	>>	SWBD-F1 POWER	
P-25-222D	25E10-07	4"	3	750	XHHW-2	1	#4/0	XHHW-2	FR:	SWBD-F1			
									TO:	ATS-F1			
									3	750	>>	SWBD-F1 POWER	2
P-25-223A	25E10-07	2"	3	#1/0	XHHW-2	1	#6	XHHW-2	FR:	GEN-F1			
									TO:	ATS-F1			
									3	#1/0	>>	STANDBY POWER	
P-25-225A	25E10-07	1.5"	3	#3	XHHW-2	1	#8	XHHW-2	FR:	MPC-F1			
									TO:	SWBD-F1			
									3	#3	>>	MPC-F1 POWER	
P-25-301A	25E10-08	2"	3	#12	XHHW-2	1	#12	XHHW-2	FR:	VAL-21.0601A			
									TO:	DISCONNECT			
									3	#12	>>	VAL-21.0601A POWER	
P-25-301B	25E10-08	2"	3	#12	XHHW-2	1	#12	XHHW-2	FR:	DISCONNECT			P-25-302C
	25E01-01								TO:	HH-1			
									3	#12	>>	VAL-21.0601A POWER	
P-25-302A	25E10-08	2"	3	#12	XHHW-2	1	#12	XHHW-2	FR:	VAL-21.0601B			
									TO:	DISCONNECT			
									3	#12	>>	VAL-21.0601B POWER	
P-25-302B	25E10-08	2"	3	#12	XHHW-2	1	#12	XHHW-2	FR:	DISCONNECT			P-25-302C
	25E01-01								TO:	HH-1			
									3	#12	>>	VAL-21.0601B POWER	
P-25-302C	25E01-01	2"	6	#12	XHHW-2	1	#12	XHHW-2	FR:	PULLBOX			
	25E10-08								TO:	MCC-C1			
									3	#12	>>	VAL-21.0601A POWER	P-25-301B
									3	#12	>>	VAL-21.0601B POWER	P-25-302B
P-25-306A	25E10-08	0.75"	3	#12	XHHW-2	1	#12	XHHW-2	FR:	VAL-21.0602E			
									TO:	DISCONNECT			
									3	#12	>>	VAL-21.0602E POWER	
P-25-306B	25E10-08	0.75"	3	#12	XHHW-2	1	#12	XHHW-2	FR:	DISCONNECT			P-25-307C
									TO:	CONDUIT TEE			
									3	#12	>>	VAL-21.0602E POWER	
P-25-307A	25E10-08	0.75"	3	#12	XHHW-2	1	#12	XHHW-2	FR:	VAL-21.0602F			
									TO:	DISCONNECT			
									3	#12	>>	VAL-21.0602F POWER	
P-25-307B	25E10-08	0.75"	3	#12	XHHW-2	1	#12	XHHW-2	FR:	DISCONNECT			P-25-307C
									TO:	CONDUIT TEE			
									3	#12	>>	VAL-21.0602F POWER	
P-25-307C	25E10-08	2"	6	#12	XHHW-2	1	#12	XHHW-2	FR:	CONDUIT TEE			
									TO:	DP-RO			
									3	#12	>>	VAL-21.0602E POWER	P-25-306B
									3	#12	>>	VAL-21.0602F POWER	P-25-307B
P-25-326A	25E01-02	0.75"	3	#12	XHHW-2	1	#12	XHHW-2	FR:	MIX-21.0701			
									TO:	VCP-21.0701			
									3	#12	>>	MIX-21.0701 POWER	
P-25-326B	25E01-02	0.75"	3	#12	XHHW-2	1	#12	XHHW-2	FR:	VCP-21.0701			
	25E01-03								TO:	MCC-A			
									3	#12	>>	VCP-21.0701 POWER	
P-25-491A	25E10-05	2"	3	#1	XHHW-2	1	#6	XHHW-2	FR:	MPC-CHEM			
	25E15-01								TO:	DP-RO			2
									3	#1	>>	MPC-CHEM POWER	
P-25-493A	25E10-05	2.5"	6	#2/0	XHHW-2	1	#6	XHHW-2	FR:	JUNCTION BOX			
	25E15-01								TO:	DP-RO			
									3	#2/0	>>	TWH-25.0001 POWER	P-25-493B
									3	#2/0	>>	TWH-25.0002 POWER	P-25-493C

1

CONDUIT SCHEDULE AREA 25

11/19/20

BRACKISH WATER DESALINATION PROJECT

WATER TREATMENT PLANT

CONDUIT			CONDUCTORS			GROUND							
NUMBER	DWG	SIZE	#	SIZE	TYPE	#	SIZE	TYPE		DESCRIPTION			CONNECTING SEGMENTS
P-25-493B	25E10-05	2"	3	#3/0	XHHW-2	1	#6	XHHW-2	FR:	TWH-25.0001			P-25-493A
									TO:	DISCONNECT			
									3	#3/0	>>	TWH-25.0001 POWER	
P-25-493C	25E10-05	2"	3	#3/0	XHHW-2	1	#6	XHHW-2	FR:	DISCONNECT			P-25-493A
									TO:	JUNCTION BOX			
									3	#3/0	>>	TWH-25.0001 POWER	
P-25-493D	25E10-05	2"	3	#3/0	XHHW-2	1	#6	XHHW-2	FR:	TWH-25.0002			
									TO:	DISCONNECT			
									3	#3/0	>>	TWH-25.0002 POWER	
P-25-493E	25E10-05	2"	3	#3/0	XHHW-2	1	#6	XHHW-2	FR:	DISCONNECT			
									TO:	JUNCTION BOX			
									3	#3/0	>>	TWH-25.0002 POWER	
P-25-496A	25E10-05	2"	3	#12	XHHW-2	1	#12	XHHW-2	FR:	VCP-61.1110			
									TO:	DP-RO			
									3	#12	>>	VCP-61.1110 POWER	
P-25-611A	25E10-01	5"	1	3/C-500:VFD	VFD		500	INTEGRAL	FR:	PMP-25.0101			
	25E15-01								TO:	VFD-25.0101			
									1	3/C-500:VFD	>>	PMP-25.0101 POWER	
P-25-611B	25E10-01	5"	1	3/C-500:VFD	VFD		500	INTEGRAL	FR:	PMP-25.0101			
	25E15-01								TO:	VFD-25.0101			
									1	3/C-500:VFD	>>	PMP-25.0101 POWER	
P-25-612A	25E15-02	3"	3	350	XHHW-2	1	#2/0	XHHW-2	FR:	VFD-25.0101			
									TO:	SWGR-RO1			
									3	350	>>	VFD-25.0101 POWER	
P-25-612B	25E15-02	3"	3	350	XHHW-2	1	#2/0	XHHW-2	FR:	VFD-25.0101			
									TO:	SWGR-RO1			
									3	350	>>	VFD-25.0101 POWER	
P-25-612C	25E15-02	3"	3	350	XHHW-2	1	#2/0	XHHW-2	FR:	VFD-25.0101			
									TO:	SWGR-RO1			
									3	350	>>	VFD-25.0101 POWER	
P-25-614A	25E10-01	0.75"	3	#10	XHHW-2	1	#10	XHHW-2	FR:	POWER JUNCTION BOX			P-25-614B
									TO:	CONDUIT TEE			
									3	#10	>>	RO TRAIN NO.1 POWER	
P-25-614B	25E10-01	1.5"	12	#10	XHHW-2	1	#10	XHHW-2	FR:	CONDUIT TEE			
	25E10-02								TO:	DP-RO			
	25E15-01								3	#10	>>	RO TRAIN NO.1 POWER	P-25-614A
									3	#10	>>	RO TRAIN NO.2 POWER	P-25-624B
									3	#10	>>	RO TRAIN NO.3 POWER	P-25-624B
									3	#10	>>	RO TRAIN NO.4 POWER	P-25-624B
P-25-616A	25E10-02	3"	1	3/C-#3/0:VFD	VFD		#3/0	INTEGRAL	FR:	PMP-25.0104			
	25E15-01								TO:	VFD-25.0104			
									1	3/C-#3/0:VFD	>>	PMP-25.0104 POWER	
P-25-616B	25E10-02	3"	1	3/C-#3/0:VFD	VFD		#3/0	INTEGRAL	FR:	PMP-25.0104			
	25E15-01								TO:	VFD-25.0104			
									1	3/C-#3/0:VFD	>>	PMP-25.0104 POWER	
P-25-617A	25E15-02	2.5"	3	250	XHHW-2	1	#2	XHHW-2	FR:	VFD-25.0104			
									TO:	SWGR-RO1			
									3	250	>>	VFD-25.0104 POWER	
P-25-617B	25E15-02	2.5"	3	250	XHHW-2	1	#2	XHHW-2	FR:	VFD-25.0104			
									TO:	SWGR-RO1			
									3	250	>>	VFD-25.0104 POWER	
P-25-618A	25E10-02	0.75"	3	#12	XHHW-2	1	#12	XHHW-2	FR:	VAL-25.0101A			
									TO:	DISCONNECT			
									3	#12	>>	VAL-25.0101A POWER	
P-25-618B	25E10-02	0.75"	3	#12	XHHW-2	1	#12	XHHW-2	FR:	DISCONNECT			P-25-619C
									TO:	CONDUIT TEE			
									3	#12	>>	VAL-25.0101A POWER	
P-25-619A	25E10-02	0.75"	3	#12	XHHW-2	1	#12	XHHW-2	FR:	VAL-25.0101B			
									TO:	DISCONNECT			
									3	#12	>>	VAL-25.0101B POWER	
P-25-619B	25E10-02	0.75"	3	#12	XHHW-2	1	#12	XHHW-2	FR:	DISCONNECT			P-25-619C
									TO:	CONDUIT TEE			
									3	#12	>>	VAL-25.0101B POWER	

1

REV	DATE	BY	DESCRIPTION
2	11-19-20	AB	REVISED PER ADDENDUM NO.6
1	11-10-20	AB	REVISED PER ADDENDUM NO.4

DESIGNED AB
DRAWN BPR
CHECKED JGB
DATE SEPTEMBER 2020

Digitally signed by Ashritha Banapuram
Contact Info: Carollo Engineers, Inc.
Date: 2020.11.20 10:57:13-08'00'

REGISTERED PROFESSIONAL ENGINEER ASHRITHA BANAPURAM No. 21815 ELECTRICAL STATE OF CALIFORNIA

carollo

ANTIOCH CALIFORNIA OPPORTUNITY LIVES·HERE

CITY OF ANTIOCH

ANTIOCH BRACKISH WATER DESALINATION PROJECT

ELECTRICAL

WATER TREATMENT PLANT
CONDUIT SCHEDULE - 17

VERIFY SCALES
BAR IS ONE INCH ON ORIGINAL DRAWING
0 1"
IF NOT ONE INCH ON THIS SHEET, ADJUST SCALES ACCORDINGLY

JOB NO. 10024A.10
DRAWING NO. 25E05-17
SHEET NO. 294 OF 498

Plot Date: 19-NOV-2020 4:03:29 PM
User: svcPW
PlotScale: 1:1
DesignScript: Carollo_Std_Pen_v0905.pen
ColorTable: gshade.ctb
Model: Layout1
LAST SAVED BY: mpacheco

CONDUIT SCHEDULE AREA 25

11/19/20

BRACKISH WATER DESALINATION PROJECT

WATER TREATMENT PLANT

CONDUIT			CONDUCTORS			GROUND						
NUMBER	DWG	SIZE	#	SIZE	TYPE	#	SIZE	TYPE		DESCRIPTION		CONNECTING SEGMENTS
P-25-707B	25E10-01	0.75"	3	#12	XHHW-2	1	#12	XHHW-2	FR:		DISCONNECT	P-25-707C
									TO:		CONDUIT TEE	
									3	#12	>> VAL-26.0301B POWER	
P-25-707C	25E10-01	0.75"	6	#12	XHHW-2	1	#12	XHHW-2	FR:		CONDUIT TEE	
	25E10-02								TO:		DP-RO △2	
	25E15-01								3	#12	>> VAL-26.0301A POWER	P-25-706B
									3	#12	>> VAL-26.0301B POWER	P-25-707B
P-25-750A	25E10-02	0.75"	3	#12	XHHW-2	1	#12	XHHW-2	FR:		VAL-25.0903E	
									TO:		DISCONNECT	
									3	#12	>> VAL-25.0903E POWER	
P-25-750B	25E10-02	0.75"	3	#12	XHHW-2	1	#12	XHHW-2	FR:		DISCONNECT	P-25-753C
									TO:		CONDUIT TEE	
									3	#12	>> VAL-25.0903E POWER	
P-25-750C	25E10-02	1"	9	#12	XHHW-2	1	#12	XHHW-2	FR:		CONDUIT TEE	P-25-753C
									TO:		CONDUIT TEE	
									3	#12	>> VAL-25.0007A POWER	P-25-752C
									3	#12	>> VAL-25.0008A POWER	P-25-752C
									3	#12	>> VAL-25.0903A POWER	P-25-753B
P-25-751A	25E10-02	0.75"	3	#12	XHHW-2	1	#12	XHHW-2	FR:		VAL-25.0007A	
									TO:		DISCONNECT	
									3	#12	>> VAL-25.0007A POWER	
P-25-751B	25E10-02	0.75"	3	#12	XHHW-2	1	#12	XHHW-2	FR:		DISCONNECT	P-25-752C
									TO:		CONDUIT TEE	
									3	#12	>> VAL-25.0007A POWER	
P-25-752A	25E10-02	0.75"	3	#12	XHHW-2	1	#12	XHHW-2	FR:		VAL-25.0008A	
									TO:		DISCONNECT	
									3	#12	>> VAL-25.0008A POWER	
P-25-752B	25E10-02	0.75"	3	#12	XHHW-2	1	#12	XHHW-2	FR:		DISCONNECT	P-25-752C
									TO:		CONDUIT TEE	
									3	#12	>> VAL-25.0008A POWER	
P-25-752C	25E10-02	0.75"	6	#12	XHHW-2	1	#12	XHHW-2	FR:		CONDUIT TEE	P-25-750C
									TO:		CONDUIT TEE	
									3	#12	>> VAL-25.0007A POWER	P-25-751B
									3	#12	>> VAL-25.0008A POWER	P-25-752B
P-25-753A	25E10-02	0.75"	3	#12	XHHW-2	1	#12	XHHW-2	FR:		VAL-25.0903A	
									TO:		DISCONNECT	
									3	#12	>> VAL-25.0903A POWER	
P-25-753B	25E10-02	0.75"	3	#12	XHHW-2	1	#12	XHHW-2	FR:		DISCONNECT	P-25-750C
									TO:		CONDUIT TEE	
									3	#12	>> VAL-25.0903A POWER	
P-25-753C	25E10-02	1"	12	#12	XHHW-2	1	#12	XHHW-2	FR:		CONDUIT TEE	
	25E15-01								TO:		DP-RO	
									3	#12	>> VAL-25.0007A POWER	P-25-750C
									3	#12	>> VAL-25.0008A POWER	P-25-750C
									3	#12	>> VAL-25.0903A POWER	P-25-750C
									3	#12	>> VAL-25.0903E POWER	P-25-750B
P-25-756A	25E10-02	3"	3	500	XHHW-2	1	#1/0	XHHW-2	FR:		HTR-25.0013	
									TO:		VCP-25.0013	
									3	500	>> HTR-25.0013 POWER	
P-25-756B	25E10-02	3"	3	500	XHHW-2	1	#1/0	XHHW-2	FR:		VCP-25.0013	
	25E15-01								TO:		MCC-C1	
									3	500	>> VCP-25.0013 POWER	
P-25-757A	25E10-02	3"	3	500	XHHW-2	1	#1/0	XHHW-2	FR:		HTR-25.0014	
									TO:		VCP-25.0014	
									3	500	>> HTR-25.0014 POWER	
P-25-757B	25E10-02	3"	3	500	XHHW-2	1	#1/0	XHHW-2	FR:		VCP-25.0014	
	25E15-01								TO:		MCC-C1	
									3	500	>> VCP-25.0014 POWER	
P-25-761A	25E10-02	1.5"	3	#4	XHHW-2	1	#6	XHHW-2	FR:		PMP-25.0903	C-25-761C
			2	#12	XHHW-2				TO:		JUNCTION BOX	
			2	#14	XHHW-2				3	#4	>> PMP-25.0903 POWER	
									2	#12	>> MWH-25.0903 POWER	
									2	#14	>> TSH-25.0903 CONTROL	

△1

CONDUIT SCHEDULE AREA 25

11/19/20

BRACKISH WATER DESALINATION PROJECT

WATER TREATMENT PLANT

CONDUIT			CONDUCTORS			GROUND						
NUMBER	DWG	SIZE	#	SIZE	TYPE	#	SIZE	TYPE		DESCRIPTION		CONNECTING SEGMENTS
P-25-761B	25E10-02	1.5"	3	#4	XHHW-2	1	#6	XHHW-2	FR:		JUNCTION BOX	
	25E15-01								TO:		MCC-C1	
									3	#4	>> PMP-25.0903 POWER	
P-25-762A	25E10-02	2"	3	#2/0	XHHW-2	1	#6	XHHW-2	FR:		TWH-25.0003	
									TO:		DISCONNECT	
									3	#2/0	>> TWH-25.0003 POWER	
P-25-762B	25E10-02	2"	3	#2/0	XHHW-2	1	#6	XHHW-2	FR:		DISCONNECT	
	25E15-01								TO:		DP-RO	
									3	#2/0	>> TWH-25.0003 POWER	
P-25-766A	25E10-02	2"	3	#3/0	XHHW-2	1	#3	XHHW-2	FR:		PMP-25.0011	C-25-766B
			2	#12	XHHW-2				TO:		JUNCTION BOX	
			2	#14	XHHW-2				3	#3/0	>> PMP-25.0011 POWER	
									2	#12	>> MWH-25.0011 POWER	
									2	#14	>> TSH-25.0011 CONTROL	
P-25-766B	25E10-02	2"	3	#3/0	XHHW-2	1	#3	XHHW-2	FR:		JUNCTION BOX	
	25E15-01								TO:		MCC-C1	
									3	#3/0	>> PMP-25.0011 POWER	
P-25-772A	25E10-02	0.75"	3	#12	XHHW-2	1	#12	XHHW-2	FR:		VAL-71.5002	
									TO:		DISCONNECT	
									3	#12	>> VAL-71.5002 POWER	
P-25-772B	25E10-02	0.75"	3	#12	XHHW-2	1	#12	XHHW-2	FR:		DISCONNECT	
	25E10-04								TO:		MCC-C1	
	25E15-01								3	#12	>> VAL-71.5002 POWER	
P-25-792A	25E15-02	3.5"	3	600	XHHW-2	1	#1/0	XHHW-2	FR:		ATS-RO	
									TO:		SWGR-RO2	
									3	600	>> DP-RO POWER	
P-25-792B	25E15-02	3.5"	3	600	XHHW-2	1	#1/0	XHHW-2	FR:		ATS-RO	
									TO:		SWGR-RO2 △2	
									3	600	>> DP-RO POWER	
P-25-793A	25E15-02	2"	3	#1	XHHW-2	1	#6	XHHW-2	FR:		GEN-RO	
									TO:		ATS-RO	
									3	#1	>> STANDBY POWER	
P-25-794A	25E15-02	3.5"	3	600	XHHW-2	1	#1/0	XHHW-2	FR:		DP-RO	
									TO:		ATS-RO	
									3	600	>> DP-RO POWER	
P-25-794B	25E15-02	3.5"	3	600	XHHW-2	1	#1/0	XHHW-2	FR:		DP-RO	
									TO:		ATS-RO	
									3	600	>> DP-RO POWER	
P-25-795A	25E15-02	1.5"	3	#1/0	XHHW-2	1	#6	XHHW-2	FR:		LP-RO	
									TO:		DP-RO	
									3	#1/0	>> LP-RO POWER	
P-25-801A	25E10-02	4"	3	#1:25KV	25KV-EPR	1	#1	XHHW-2	FR:		PLANT A SUBSTATION XFMR	
									TO:		MAIN PANEL (THROUGH MH-2)	
									3	#1:25KV	>> PLANT A SUBSTATION XFMR POWER	
P-25-806A	25E10-02	4"	3	#1:25KV	25KV-EPR	1	#1	XHHW-2	FR:		PLANT B SUBSTATION XFMR	
									TO:		MAIN PANEL (THROUGH MH-1)	
									3	#1:25KV	>> PLANT A SUBSTATION XFMR POWER	
P-25-811A	25E10-02	5"	3	#2/0:25KV	25KV-EPR	1	#1	XHHW-2	FR:		XFMR-C1	
	25E10-03								TO:		MAIN PANEL (THROUGH MH-2)	
									3	#2/0:25KV	>> XFMR-C1 POWER	
P-25-816A	25E10-02	4"	1	PULL	ROPE				FR:		XFMR-C2 (FUTURE)	
	25E10-03								TO:		MAIN PANEL (THROUGH MH-2)	
									1	PULL	>> SPARE	
P-25-821A	25E01-03	4"	3	#3/0:15KV	15KV-EPR	1	#2	XHHW-2	FR:		SWGR-C1	
									TO:		XFMR-C1	
									3	#3/0:15KV	>> SWGR-C1 POWER	
P-25-823A	25E01-03	4"	3	#2:15KV	15KV-EPR	1	#2	XHHW-2	FR:		GEN-C1	
									TO:		SWGR-C1	
									3	#2:15KV	>> GEN-C1 POWER	
P-25-826A	25E01-03	4"	3	#2:15KV	15KV-EPR	1	#2	XHHW-2	FR:		GEN-C2	
									TO:		SWGR-C1	
									3	#2:15KV	>> GEN-C2 POWER	

REV	DATE	BY	DESCRIPTION
2	11-19-20	AB	REVISED PER ADDENDUM NO.6
1	11-10-20	AB	REVISED PER ADDENDUM NO.4

DESIGNED AB
DRAWN BPR
CHECKED JGB
DATE SEPTEMBER 2020

Digitally signed by Ashritha Banaparam
Contact Info: Carollo Engineers, Inc.
Date: 2020.11.20 10:56:21 -08'00'

REGISTERED PROFESSIONAL ENGINEER ASHRITHA BANAPARAM No. 21815 ELECTRICAL STATE OF CALIFORNIA

carollo

ANTIOCH CALIFORNIA OPPORTUNITY LIVES·HERE

CITY OF ANTIOCH

ANTIOCH BRACKISH WATER DESALINATION PROJECT

ELECTRICAL

WATER TREATMENT PLANT
CONDUIT SCHEDULE - 20

VERIFY SCALES
BAR IS ONE INCH ON ORIGINAL DRAWING
0 1"
IF NOT ONE INCH ON THIS SHEET, ADJUST SCALES ACCORDINGLY

JOB NO. 10024A.10
DRAWING NO. 25E05-20
SHEET NO. 297 OF 498

LAST SAVED BY: mpacheco Model: Layout1 ColorTable: gshade.ctb DesignScript: Carollo_Std_Pen_v0905.pen PlotScale: 1:1 User: svcPW Plot Date: 19-NOV-2020 4:25:07 PM

CONDUIT SCHEDULE AREA 25

11/19/20

BRACKISH WATER DESALINATION PROJECT

WATER TREATMENT PLANT

CONDUIT			CONDUCTORS			GROUND				
NUMBER	DWG	SIZE	#	SIZE	TYPE	#	SIZE	TYPE	DESCRIPTION	CONNECTING SEGMENTS
S-25-186B	25E10-10	2"	30 7	#14 2/CS-#16	XHHW-2	1	#14	XHHW-2	FR: CONDUIT TEE TO: CONDUIT TEE 10 #14 >> VAL-24.0802B CONTROL 2 2/CS-#16 >> VAL-24.0802B SIGNAL 10 #14 >> VAL-24.0804B CONTROL 2 2/CS-#16 >> VAL-24.0804B SIGNAL 10 #14 >> VAL-24.0804A CONTROL 2 2/CS-#16 >> VAL-24.0804A SIGNAL 1 2/CS-#16 >> FIT-24.0804A SIGNAL	C-25-184B C-25-183B C-25-183B C-25-183B C-25-183B C-25-183B C-25-183B S-25-186A
S-25-191A	25E10-11	0.75"	1	2/CS-#16		1	#14	XHHW-2	FR: AIT-24.0003 TO: JUNCTION BOX 1 2/CS-#16 >> AIT-24.0003 SIGNAL	S-25-192B
S-25-192A	25E10-11	0.75"	1	2/CS-#16		1	#14	XHHW-2	FR: AIT-24.0004 TO: JUNCTION BOX 1 2/CS-#16 >> AIT-24.0004 SIGNAL	S-25-192B
S-25-192B	25E10-11 25E01-03	0.75"	2	2/CS-#16		1	#14	XHHW-2	FR: JUNCTION BOX TO: PCM-25.0001 1 2/CS-#16 >> AIT-24.0003 SIGNAL 1 2/CS-#16 >> AIT-24.0004 SIGNAL	 S-25-191A S-25-192A
S-25-193A	25E10-11	0.75"	1	2/CS-#16		1	#14	XHHW-2	FR: AIT-26.0401F TO: JUNCTION BOX 1 2/CS-#16 >> AIT-26.0401F SIGNAL	
S-25-201A	25E10-06	0.75"	1	2/CS-#16		1	#14	XHHW-2	FR: PIT-25.0001 TO: CONDUIT TEE 1 2/CS-#16 >> PIT-25.0001 SIGNAL	S-25-201C
S-25-201B	25E10-06	0.75"	1	2/CS-#16		1	#14	XHHW-2	FR: FIT-25.0001A TO: CONDUIT TEE 1 2/CS-#16 >> FIT-25.0001A SIGNAL	S-25-201C
S-25-201C	25E10-06 25E10-07	1"	2	2/CS-#16		1	#14	XHHW-2	FR: CONDUIT TEE TO: PCM-25.0001 1 2/CS-#16 >> PIT-25.0001 SIGNAL 1 2/CS-#16 >> FIT-25.0001A SIGNAL	 S-25-201A S-25-201B
S-25-202A	25E10-06	0.75"	1	2/CS-#16		1	#14	XHHW-2	FR: PIT-25.0002 TO: CONDUIT TEE 1 2/CS-#16 >> PIT-25.0002 SIGNAL	S-25-202C
S-25-202B	25E10-06	0.75"	1	2/CS-#16		1	#14	XHHW-2	FR: FIT-25.0002A TO: CONDUIT TEE 1 2/CS-#16 >> FIT-25.0002A SIGNAL	S-25-202C
S-25-202C	25E10-06 25E10-07	1"	2	2/CS-#16		1	#14	XHHW-2	FR: CONDUIT TEE TO: PCM-25.0001 1 2/CS-#16 >> PIT-25.0002 SIGNAL 1 2/CS-#16 >> FIT-25.0002A SIGNAL	 S-25-202A S-25-202B
S-25-203A	25E10-06	0.75"	1	2/CS-#16		1	#14	XHHW-2	FR: PIT-25.0003 TO: CONDUIT TEE 1 2/CS-#16 >> PIT-25.0003 SIGNAL	S-25-203C
S-25-203B	25E10-06	0.75"	1	2/CS-#16		1	#14	XHHW-2	FR: FIT-25.0003A TO: CONDUIT TEE 1 2/CS-#16 >> FIT-25.0003A SIGNAL	S-25-203C
S-25-203C	25E10-06 25E10-07	1"	2	2/CS-#16		1	#14	XHHW-2	FR: CONDUIT TEE TO: PCM-25.0001 1 2/CS-#16 >> PIT-25.0003 SIGNAL 1 2/CS-#16 >> FIT-25.0003A SIGNAL	 S-25-203A S-25-203B
S-25-204C	25E10-06 25E10-07	1"	1	PULL	ROPE				FR: FUTURE PUMP TO: PCM-25.0001 1 PULL >> SPARE	
S-25-210A	25E10-06 25E10-07	1"	1	2/CS-#16		1	#14	XHHW-2	FR: LIT-25.0001 TO: PCM-25.0001 1 2/CS-#16 >> LIT-25.0001 SIGNAL	
S-25-211A	25E10-06 25E10-07	1"	1	2/CS-#16		1	#14	XHHW-2	FR: FIT-25.0001B TO: CONDUIT TEE 1 2/CS-#16 >> FIT-25.0001B SIGNAL	C-25-211B
S-25-213A	25E10-06 25E10-07	0.75"	1	2/CS-#16		1	#14	XHHW-2	FR: AIT-25.0006B TO: JUNCTION BOX 1 2/CS-#16 >> AIT-25.0006B SIGNAL	C-25-213B

1

CONDUIT SCHEDULE AREA 25

11/19/20

BRACKISH WATER DESALINATION PROJECT

WATER TREATMENT PLANT

CONDUIT			CONDUCTORS			GROUND				
NUMBER	DWG	SIZE	#	SIZE	TYPE	#	SIZE	TYPE	DESCRIPTION	CONNECTING SEGMENTS
S-25-214A	25E01-02	0.75"	1	2/CS-#16		1	#14	XHHW-2	FR: AIT-25.0006A TO: JUNCTION BOX 1 2/CS-#16 >> AIT-25.0006A SIGNAL	C-25-214B
S-25-223A	25E10-07	2"	1		CAT6	1	#14	XHHW-2	FR: GEN-F1 TO: ATS-F1 1 CAT6 >> STANDBY SIGNAL	
S-25-223B	25E10-07	1"	1		CAT6	1	#14	XHHW-2	FR: ATS-F1 TO: PLC-25.0001 1 CAT6 >> GENERATOR SIGNAL	2
S-25-301A	25E10-08	0.75"	1	MFR	CABLE	1	#14	XHHW-2	FR: AE-21.0605 TO: AIT-21.0605 1 MFR >> AE-21.0605 SIGNAL	
S-25-301B	25E10-08	0.75"	1	2/CS-#16		1	#14	XHHW-2	FR: AIT-21.0605 TO: CONDUIT TEE 1 2/CS-#16 >> AIT-21.0605 SIGNAL	S-25-301C
S-25-301C	25E10-08	1"	10 1	#14 2/CS-#16	XHHW-2	1	#14	XHHW-2	FR: CONDUIT TEE TO: CONDUIT TEE 1 2/CS-#16 >> AIT-21.0605 SIGNAL 10 #14 >> VAL-21.0602E CONTROL	C-25-306C S-25-301B C-25-306A
S-25-303A	25E01-01	0.75"	1	2/CS-#16		1	#14	XHHW-2	FR: PIT-21.0602 TO: PULLBOX 1 2/CS-#16 >> PIT-21.0602 SIGNAL	S-25-303B
S-25-303B	25E01-01 25E15-01	2"	20 1	#14 2/CS-#16	XHHW-2	1	#14	XHHW-2	FR: PULLBOX TO: PCM-25.0000 10 #14 >> VAL-21.0601A CONTROL 10 #14 >> VAL-21.0601B CONTROL 1 2/CS-#16 >> PIT-21.0602 SIGNAL	 C-25-302C C-25-302C S-25-303A
S-25-303C	25E01-01	1"	1	MFR	CABLE	1	#14	XHHW-2	FR: PE-21.0602 TO: PIT-21.0602 1 MFR >> PE-21.0602 SIGNAL	
S-25-306B	25E10-08	0.75"	1	2/CS-#16		1	#14	XHHW-2	FR: FIT-21.0602 TO: CONDUIT TEE 1 2/CS-#16 >> FIT-21.0602 SIGNAL	C-25-306C
S-25-307C	25E10-08	0.75"	1	2/CS-#16		1	#14	XHHW-2	FR: FIT-21.0601 TO: CONDUIT TEE 1 2/CS-#16 >> FIT-21.0601 SIGNAL	C-25-307D
S-25-308A	25E10-08	0.75"	6 1	#14 2/CS-#16	XHHW-2	1	#14	XHHW-2	FR: CONDUIT TEE TO: JUNCTION BOX 6 #14 >> LSH-21.0608 CONTROL 1 2/CS-#16 >> FIT-21.0603 SIGNAL	S-25-311B C-25-308A S-25-308B
S-25-308B	25E10-08	0.75"	1	2/CS-#16		1	#14	XHHW-2	FR: FIT-21.0603 TO: CONDUIT TEE 1 2/CS-#16 >> FIT-21.0603 SIGNAL	S-25-308A
S-25-311B	25E01-02 25E15-01	2"	26 4	#14 2/CS-#16	XHHW-2	1	#14	XHHW-2	FR: JUNCTION BOX TO: PCM-25.0000 1 2/CS-#16 >> AIT-21.0605 SIGNAL 10 #14 >> VAL-21.0602E CONTROL 1 2/CS-#16 >> FIT-21.0602 SIGNAL 10 #14 >> VAL-21.0602F CONTROL 1 2/CS-#16 >> FIT-21.0601 SIGNAL 6 #14 >> LSH-21.0608 CONTROL 1 2/CS-#16 >> FIT-21.0603 SIGNAL	 C-25-307D C-25-307D C-25-307D C-25-307D C-25-307D S-25-308A S-25-308A
S-25-321A	25E01-02	0.75"	1	2/CS-#16		1	#14	XHHW-2	FR: AIT-21.0603 TO: CONDUIT TEE 1 2/CS-#16 >> AIT-21.0603 SIGNAL	S-25-322B
S-25-322A	25E01-02	0.75"	1	2/CS-#16		1	#14	XHHW-2	FR: AIT-21.0604 TO: CONDUIT TEE 1 2/CS-#16 >> AIT-21.0604 SIGNAL	S-25-322B
S-25-322B	25E01-02 25E01-03 25E10-07	0.75"	2	2/CS-#16		1	#14	XHHW-2	FR: CONDUIT TEE TO: PLC-25.0001 (THROUGH PULLBOX) 1 2/CS-#16 >> AIT-21.0603 SIGNAL 1 2/CS-#16 >> AIT-21.0604 SIGNAL	 S-25-321A S-25-322A
S-25-402A	25E10-05	0.75"	1		RS-485	1	#14	XHHW-2	FR: FIT-65.0201 TO: CONDUIT TEE 1 RS-485 >> FIT-65.0201 SIGNAL	

REV	DATE	BY	DESCRIPTION
2	11-19-20	AB	REVISED PER ADDENDUM NO.6
1	11-10-20	AB	REVISED PER ADDENDUM NO.4

DESIGNED AB
DRAWN BPR
CHECKED JGB
DATE SEPTEMBER 2020

Digitally signed by Ashritha Banapuram
Contact Info: Carollo Engineers, Inc.
Date: 2020.11.20 10:58:03-08'00'

REGISTERED PROFESSIONAL ENGINEER ASHRITHA BANAPURAM No. 21815 ELECTRICAL STATE OF CALIFORNIA

carollo

ANTIOCH CALIFORNIA OPPORTUNITY LIVES·HERE

CITY OF ANTIOCH
ANTIOCH BRACKISH WATER DESALINATION PROJECT
ELECTRICAL
WATER TREATMENT PLANT
CONDUIT SCHEDULE - 23

VERIFY SCALES
BAR IS ONE INCH ON ORIGINAL DRAWING
0 1"
IF NOT ONE INCH ON THIS SHEET, ADJUST SCALES ACCORDINGLY

JOB NO. 10024A.10
DRAWING NO. 25E05-23
SHEET NO. 300 OF 498

Plot Date: 19-NOV-2020 3:20:55 PM User: svcPW PlotScale: 1:1 DesignScript: Carollo_Std_Pen_v0905.pen ColorTable: gshade.ctb Model: Layout1 LAST SAVED BY: mpacheco

CONDUIT SCHEDULE AREA 25

11/19/20

BRACKISH WATER DESALINATION PROJECT

WATER TREATMENT PLANT

CONDUIT			CONDUCTORS			GROUND				
NUMBER	DWG	SIZE	#	SIZE	TYPE	#	SIZE	TYPE	DESCRIPTION	CONNECTING SEGMENTS
S-25-768C	25E10-02	0.75"	2	2/CS-#16		1	#14	XHHW-2	FR: CONDUIT TEE	S-25-768D
									TO: CONDUIT TEE	
									1 2/CS-#16 >> FIT-25.0018 SIGNAL	S-25-768A
									1 2/CS-#16 >> PIT-25.0017 SIGNAL	S-25-768B
S-25-768D	25E10-02	1.5"	2	#14	XHHW-2	1	#14	XHHW-2	FR: CONDUIT TEE	S-25-756B
			6	2/CS-#16					TO: CONDUIT TEE	
									1 2/CS-#16 >> FIT-25.0903 SIGNAL	S-25-757D
									1 2/CS-#16 >> LIT-25.0903 SIGNAL	S-25-757D
									2 #14 >> FSH-25.0017 SIGNAL	S-25-757D
									1 2/CS-#16 >> TIT-25.0010 SIGNAL	S-25-757D
									1 2/CS-#16 >> LIT-25.0010 SIGNAL	S-25-757D
									1 2/CS-#16 >> FIT-25.0018 SIGNAL	S-25-768C
									1 2/CS-#16 >> PIT-25.0017 SIGNAL	S-25-768C
S-25-771A	25E10-02	0.75"	2	#12	XHHW-2	1	#12	XHHW-2	FR: FIT-71.5001	S-25-771C
			1	2/CS-#16					TO: CONDUIT TEE	
									2 #12 >> FIT-71.5001 POWER	
									1 2/CS-#16 >> FIT-71.5001 SIGNAL	
S-25-771B	25E10-02	0.75"	1	2/CS-#16		1	#14	XHHW-2	FR: PIT-71.5001	S-25-771C
									TO: CONDUIT TEE	
									1 2/CS-#16 >> PIT-71.5001 SIGNAL	
S-25-771C	25E10-02	1"	2	#12	XHHW-2	1	#12	XHHW-2	FR: CONDUIT TEE	S-25-771E
			2	2/CS-#16					TO: CONDUIT TEE	
									2 #12 >> FIT-71.5001 POWER	S-25-771A
									1 2/CS-#16 >> FIT-71.5001 SIGNAL	S-25-771A
									1 2/CS-#16 >> PIT-71.5001 SIGNAL	S-25-771B
S-25-771D	25E10-02	0.75"	1	2/CS-#16		1	#2:5KV	XHHW-2	FR: PIT-71.5005	S-25-771E
									TO: CONDUIT TEE	
									1 2/CS-#16 >> PIT-71.5005 SIGNAL	
S-25-771E	25E10-02	1"	2	#12	XHHW-2	1	#12	XHHW-2	FR: CONDUIT TEE	S-25-771G
			3	2/CS-#16					TO: CONDUIT TEE	
									2 #12 >> FIT-71.5001 POWER	S-25-771C
									1 2/CS-#16 >> FIT-71.5001 SIGNAL	S-25-771C
									1 2/CS-#16 >> PIT-71.5001 SIGNAL	S-25-771C
									1 2/CS-#16 >> PIT-71.5005 SIGNAL	S-25-771D
S-25-771F	25E10-02	0.75"	1	2/CS-#16		1	#14	XHHW-2	FR: PIT-71.5006	S-25-771G
									TO: CONDUIT TEE	
									1 2/CS-#16 >> PIT-71.5006 SIGNAL	
S-25-771G	25E10-02	1.5"	2	#12	XHHW-2	1	#12	XHHW-2	FR: CONDUIT TEE	S-25-772B
			4	2/CS-#16					TO: CONDUIT TEE	
									2 #12 >> FIT-71.5001 POWER	S-25-771E
									1 2/CS-#16 >> FIT-71.5001 SIGNAL	S-25-771E
									1 2/CS-#16 >> PIT-71.5001 SIGNAL	S-25-771E
									1 2/CS-#16 >> PIT-71.5005 SIGNAL	S-25-771E
									1 2/CS-#16 >> PIT-71.5006 SIGNAL	S-25-771F
S-25-771H	25E10-02	0.75"	1	2/CS-#16		1	#14	XHHW-2	FR: PIT-71.5007	S-25-772D
									TO: CONDUIT TEE	
									1 2/CS-#16 >> PIT-71.5007 SIGNAL	
S-25-772B	25E10-02	1.5"	2	#12	XHHW-2	1	#12	XHHW-2	FR: CONDUIT TEE	
			10	#14	XHHW-2				TO: CONDUIT TEE	
			4	2/CS-#16					2 #12 >> FIT-71.5001 POWER	S-25-771G
									1 2/CS-#16 >> FIT-71.5001 SIGNAL	S-25-771G
									1 2/CS-#16 >> PIT-71.5001 SIGNAL	S-25-771G
									1 2/CS-#16 >> PIT-71.5005 SIGNAL	S-25-771G
									1 2/CS-#16 >> PIT-71.5006 SIGNAL	S-25-771G
									10 #14 >> VAL-71.5002 CONTROL	C-25-772A
S-25-772D	25E10-02	1.5"	2	#12	XHHW-2	1	#12	XHHW-2	FR: CONDUIT TEE	C-25-751C
	25E10-04		10	#14	XHHW-2				TO: CONDUIT TEE	
	25E15-01		5	2/CS-#16					2 #12 >> FIT-71.5001 CONTROL	C-25-772B
									1 2/CS-#16 >> FIT-71.5001 SIGNAL	C-25-772B
									1 2/CS-#16 >> PIT-71.5001 SIGNAL	C-25-772B
									1 2/CS-#16 >> PIT-71.5005 SIGNAL	C-25-772B
									1 2/CS-#16 >> PIT-71.5006 SIGNAL	C-25-772B
									10 #14 >> VAL-71.5002 CONTROL	C-25-772B
									1 2/CS-#16 >> PIT-71.5007 SIGNAL	S-25-771H
S-25-793A	25E15-02	2"	1		CAT6	1	#14	XHHW-2	FR: GEN-RO	
									TO: ATS-RO	
									1 CAT6 >> STANDBY NETWORK	
S-25-793B	25E15-02	0.75"	1		CAT6	1	#14	XHHW-2	FR: ATS-RO	
									TO: PCM-25.0000	
									1 CAT6 >> GENERATOR SIGNAL	

2

1

CONDUIT SCHEDULE AREA 25

11/19/20

BRACKISH WATER DESALINATION PROJECT

WATER TREATMENT PLANT

CONDUIT			CONDUCTORS			GROUND				
NUMBER	DWG	SIZE	#	SIZE	TYPE	#	SIZE	TYPE	DESCRIPTION	CONNECTING SEGMENTS
X-25-201A	25E10-06	1"	1	PULL	ROPE				FR: CLEARWELL	
	25E10-07								TO: PCM-25.0001	
									1 PULL >> SPARE	
X-25-202A	25E10-06	1"	1	PULL	ROPE				FR: CLEARWELL	
	25E10-07								TO: PCM-25.0001	
									1 PULL >> SPARE	
X-25-203A	25E10-06	1"	1	PULL	ROPE				FR: CLEARWELL	
	25E10-07								TO: SWBD-F1	
									1 PULL >> SPARE	
X-25-221A	25E10-07	4"	1	PULL	ROPE				FR: SWBD-F1	
									TO: XFMR-F1	
									1 PULL >> SPARE	
X-25-223A	25E10-07	2"	1	PULL	ROPE				FR: GEN-F1	
									TO: ATS-F1	
									1 PULL >> SPARE	
X-25-301A	25E10-08	2"	1	PULL	ROPE				FR: 30" VAULT	
									TO: PULLBOX	
									1 PULL >> SPARE	
X-25-302A	25E10-08	2"	1	PULL	ROPE				FR: 18" VAULT	
									TO: PULLBOX	
									1 PULL >> SPARE	
X-25-303A	25E01-01	2"	1	PULL	ROPE				FR: PULLBOX	
	25E15-01								TO: PCM-25.0000	
									1 PULL >> SPARE	
X-25-303B	25E01-01	2"	1	PULL	ROPE				FR: PULLBOX	
	25E15-01								TO: MCC-C1	
									1 PULL >> SPARE	
X-25-306A	25E10-08	2"	1	PULL	ROPE				FR: FLOWMETER & VALVE PAD	
									TO:	
									1 PULL >> SPARE	
X-25-307A	25E10-08	2"	1	PULL	ROPE				FR: FLOWMETER & VALVE PAD	
									TO: PCM-20.0000	
									1 PULL >> SPARE	
X-25-491A	25E10-05	2"	1	PULL	ROPE				FR: PCM-60.0000	
	25E15-01								TO: PCM-25.0000	
									1 PULL >> SPARE	
X-25-492A	25E10-05	2"	1	PULL	ROPE				FR: PCM-60.0000	
	25E15-01								TO: PCM-25.0000	
									1 PULL >> SPARE	
X-25-694A	25E10-02	2"	1	PULL	ROPE				FR: CDU-79.3104 (FUTURE)	
	25E15-02								TO: MCC-C1	
									1 PULL >> SPARE	
X-25-694B	25E10-02	1"	1	PULL	ROPE				FR: CDU-79.3104 (FUTURE)	
	25E15-03								TO: AHU-79.3103 (FUTURE)	
									1 PULL >> SPARE	
X-25-793A	25E10-02	2"	1	PULL	ROPE				FR: GEN-RO	
	25E15-02								TO: ATS-RO	
									1 PULL >> SPARE	
X-25-802A	25E01-02	4"	1	PULL	ROPE				FR: PLANT A SUBSTATION XFMR	
									TO: MAIN PANEL (THROUGH MH-2)	
									1 PULL >> SPARE	
X-25-807A	25E01-02	4"	1	PULL	ROPE				FR: PLANT B SUBSTATION XFMR	
									TO: MAIN PANEL (THROUGH MH-1)	
									1 PULL >> SPARE	
X-25-812A	25E01-04	5"	1	PULL	ROPE				FR: XFMR-C1	
									TO: MAIN PANEL (THROUGH MH-2)	
									1 PULL >> SPARE	
X-25-816A	25E01-04	4"	1	PULL	ROPE				FR: XFMR-C2 (FUTURE)	
									TO: MAIN PANEL (THROUGH MH-2)	
									1 PULL >> SPARE	
X-25-817A	25E01-04	4"	1	PULL	ROPE				FR: XFMR-C2 (FUTURE)	
									TO: MAIN PANEL (THROUGH MH-2)	
									1 PULL >> SPARE	

2

REV	DATE	BY	DESCRIPTION
2	11-19-20	AB	REVISED PER ADDENDUM NO.6
1	11-10-20	AB	REVISED PER ADDENDUM NO.4

DESIGNED AB
DRAWN SGS
CHECKED JGB
DATE SEPTEMBER 2020

Digitally signed by Ashritha Banapuram
Contact Info: Carollo Engineers, Inc.
Date: 2020.11.20 10:56:41-08'00'

REGISTERED PROFESSIONAL ENGINEER ASHRITHA BANAPURAM No. 21815 ELECTRICAL STATE OF CALIFORNIA

carollo

ANTIOCH CALIFORNIA OPPORTUNITY LIVES·HERE

CITY OF ANTIOCH

ANTIOCH BRACKISH WATER DESALINATION PROJECT

ELECTRICAL

WATER TREATMENT PLANT
CONDUIT SCHEDULE - 27

VERIFY SCALES
BAR IS ONE INCH ON ORIGINAL DRAWING
0 1"
IF NOT ONE INCH ON THIS SHEET, ADJUST SCALES ACCORDINGLY

JOB NO. 10024A.10
DRAWING NO. 25E05-27
SHEET NO. 304 OF 498

Plot Date: 19-NOV-2020 4:18:38 PM User: svcPW PlotScale: 1:1 DesignScript: Carollo_Std_Pen_v0905.pen ColorTable: gshade.ctb Model: Layout1 LAST SAVED BY: mpacheco

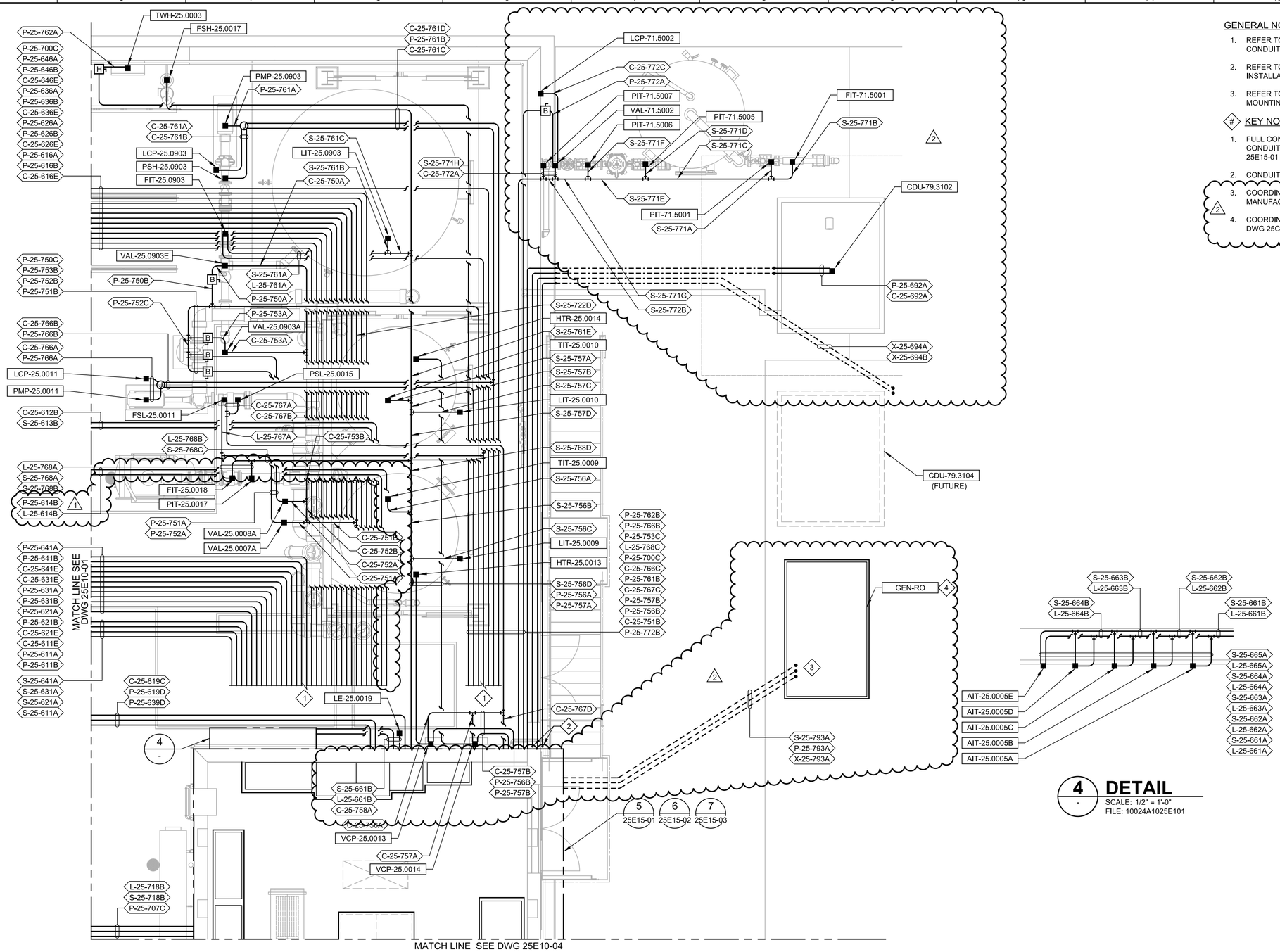

GENERAL NOTES:

1. REFER TO TYPICAL DETAIL EA020, EM102, FOR CEILING MOUNTED CONDUIT INSTALLATION AS REQUIRED.
2. REFER TO TYPICAL DETAIL EA080 FOR WALL MOUNTED CONDUIT INSTALLATION.
3. REFER TO TYPICAL DETAIL EM210 FOR INDOOR EQUIPMENT MOUNTING STAND INSTALLATION.

KEY NOTES:

1. FULL CONDUIT ROUTING NOT SHOWN FOR DRAWING CLARITY. CONDUITS CONTINUE INTO ELECTRICAL ROOM. REFER DRAWING 25E15-01 FOR CONTINUATION.
2. CONDUITS CONTINUE ON DRAWING 25E15-03.
3. COORDINATE THE EXACT CONDUIT STUB UP LOCATION WITH THE MANUFACTURER.
4. COORDINATE EXACT GENERATOR LOCATION WITH THE CIVIL PLAN DWG 25C03.

F PLAN
25E01-06
SCALE: 1/4" = 1'-0"
FILE: 10024A1025E101

4 DETAIL
SCALE: 1/2" = 1'-0"
FILE: 10024A1025E101

REV	DATE	BY	DESCRIPTION
2	11-19-20	AB	REVISED PER ADDENDUM NO.6
1	11-10-20	AB	REVISED PER ADDENDUM NO.4

DESIGNED AB
DRAWN MNH
CHECKED JGB
DATE SEPTEMBER 2020

Digitally signed by Ashritha Banapuram
Contact: Carollo Engineers, Inc.
Date: 2020.11.20 13:53:24 -08'00'

REGISTERED PROFESSIONAL ENGINEER ASHRITHA BANAPURAM No. 21815 ELECTRICAL STATE OF CALIFORNIA

carollo

ANTIOCH CALIFORNIA OPPORTUNITY LIVES•HERE

CITY OF ANTIOCH
ANTIOCH BRACKISH WATER DESALINATION PROJECT
ELECTRICAL
RO BUILDING POWER AND CONTROL PLAN - 2

VERIFY SCALES
BAR IS ONE INCH ON ORIGINAL DRAWING
0 1"
IF NOT ONE INCH ON THIS SHEET, ADJUST SCALES ACCORDINGLY

JOB NO. 10024A.10
DRAWING NO. 25E10-02
SHEET NO. 307 OF 498

PROJECT NO. 10024A10 FILE NAME: 10024A1025E1002.dgn

Model: Layout1 ColorTable: gsisade.ctb DesignScript: Carollo_Std_Pen_v0905.pen PlotScale: 1:1 Plot Date: 20-NOV-2020 8:51:35 AM User: svcPW LAST SAVED BY: mpacheco

GENERAL NOTES:

1. REFER TO TYPICAL DETAIL EM115, EM116, AND EM117 FOR EMBEDDED CONDUIT IN SLAB.
2. REFER TO TYPICAL DETAIL EM211 FOR EQUIPMENT MOUNTING STAND INSTALLATION.

KEY NOTES:

1. PROVIDE SUPPORTS IN THE TRANSFORMER FOR THE CABLES. CLAMP THE CABLES TO THE SUPPORT.
2. PROVIDE EQUIPMENT PADS FOR ALL ELECTRICAL EQUIPMENT. COORDINATE THE EXACT LOCATION OF EQUIPMENT PADS WITH THE CIVIL PLAN DWG 25C02.

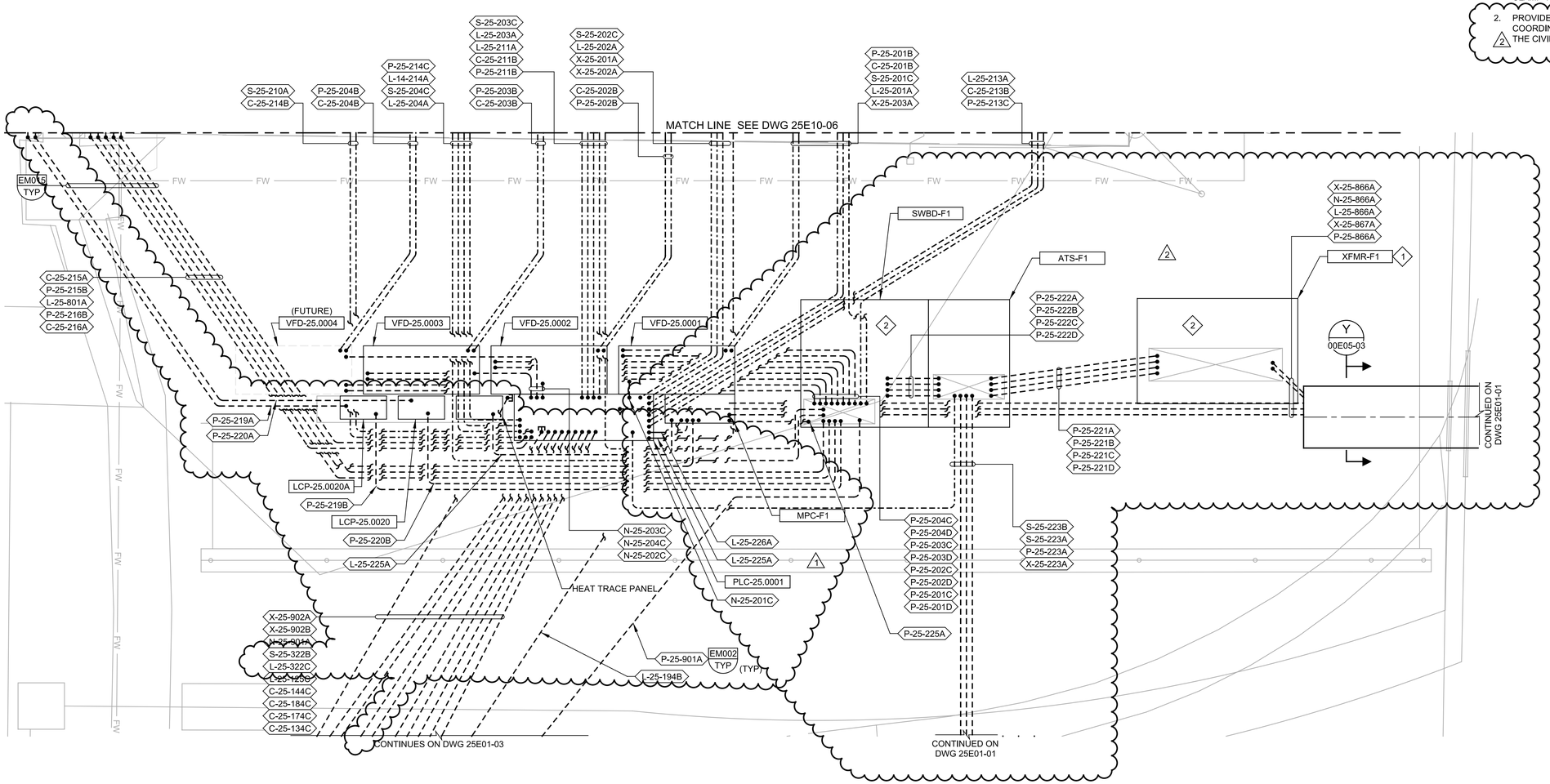

L PLAN

25E01-02

SCALE: 3/8" = 1'-0"
FILE: 10024A1025E105

REV	DATE	BY	DESCRIPTION
2	11-19-20	AB	REVISED PER ADDENDUM NO.6
1	11-10-20	AB	REVISED PER ADDENDUM NO.4

DESIGNED AB
DRAWN JRS
CHECKED JGB
DATE SEPTEMBER 2020

Digitally signed by Ashritha Banapuram
Contact Info: Carollo Engineers, Inc.
Date: 2020.11.20 10:56:20-08'00'

REGISTERED PROFESSIONAL ENGINEER ASHRITHA BANAPURAM No. 21815 ELECTRICAL STATE OF CALIFORNIA

carollo

ANTIOCH CALIFORNIA OPPORTUNITY LIVES•HERE

CITY OF ANTIOCH
ANTIOCH BRACKISH WATER DESALINATION PROJECT
ELECTRICAL
BRACKISH FILTERED WATER PUMP STATION
ELECTRICAL PAD POWER AND CONTROL PLAN

VERIFY SCALES
BAR IS ONE INCH ON ORIGINAL DRAWING
0 1"
IF NOT ONE INCH ON THIS SHEET, ADJUST SCALES ACCORDINGLY

JOB NO. 10024A.10
DRAWING NO. 25E10-07
SHEET NO. 312 OF 498

Plot Date: 20-NOV-2020 8:16:12 AM
User: svcPW
PlotScale: 1:1
DesignScript: Carollo_Std_Pen_v0905.pen
ColorTable: gshade.ctb
Model: Layout1
LAST SAVED BY: mpacheco

GENERAL NOTES:

1. THE ELECTRICAL EQUIPMENT SIZING IS BASED ON DIMENSION FROM EATON. CONTRACTOR IS RESPONSIBLE TO COORDINATE SPACE REQUIREMENTS BASED ON THE SELECTED MANUFACTURER.
2. REFER TO TYPICAL DETAIL EA030, EM102, FOR CEILING MOUNTED CONDUIT INSTALLATION AS REQUIRED.
3. REFER TO TYPICAL DETAIL EA080 FOR WALL MOUNTED CONDUIT INSTALLATION.

KEY NOTES:

1. REFER TO DWG 25E10-02 FOR CONTINUATION.
2. REFER TO DWG 25E10-04 FOR CONTINUATION.

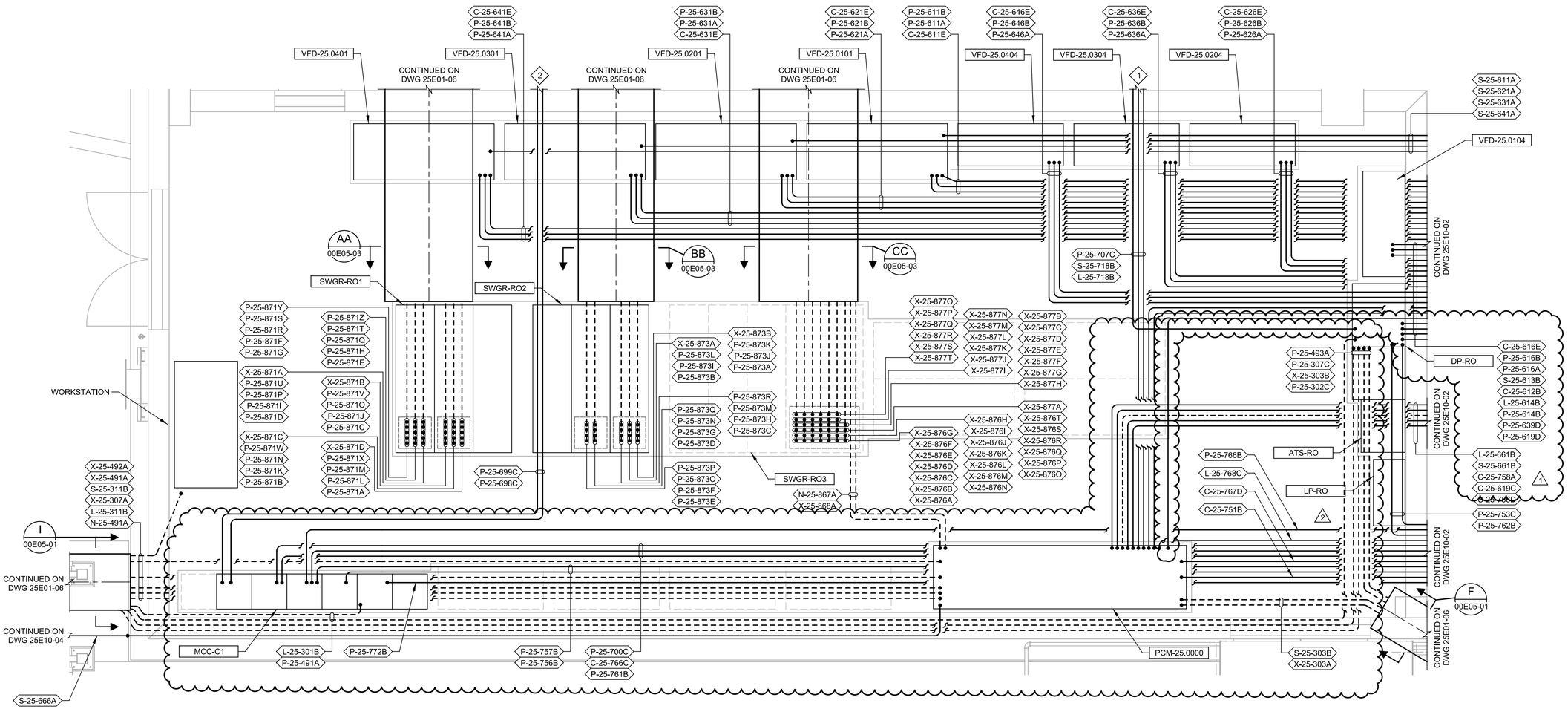

5 DETAIL

25E10-02
25E10-04

SCALE: 3/8" = 1'-0"
FILE: 10024A1025E102

REV	DATE	BY	DESCRIPTION
2	11-19-20	AB	REVISED PER ADDENDUM NO.6
1	11-10-20	AB	REVISED PER ADDENDUM NO.4

DESIGNED AB
DRAWN MNH
CHECKED JGB
DATE SEPTEMBER 2020

Digitally signed by Ashritha Banapuram
Contact Info: Carollo Engineers, Inc.
Date: 2020.11.20 10:56:58-08'00'

REGISTERED PROFESSIONAL ENGINEER ASHRITHA BANAPURAM No. 21815 ELECTRICAL STATE OF CALIFORNIA

carollo

ANTIOCH CALIFORNIA OPPORTUNITY LIVES·HERE

CITY OF ANTIOCH

ANTIOCH BRACKISH WATER DESALINATION PROJECT

ELECTRICAL

RO BUILDING ELECTRICAL ROOM
POWER AND CONTROL DETAIL - 1

VERIFY SCALES
BAR IS ONE INCH ON ORIGINAL DRAWING
0 1"
IF NOT ONE INCH ON THIS SHEET, ADJUST SCALES ACCORDINGLY

JOB NO. 10024A.10
DRAWING NO. 25E15-01
SHEET NO. 317 OF 498

PROJECT NO. 10024A10 FILE NAME: 10024A1025E1501.dgn

Plot Date: 20-NOV-2020 7:52:43 AM User: svcPW PlotScale: 1:1 DesignScript: Carollo_Std_Pen_v0905.pen ColorTable: gshade.ctb Model: Layout1 LAST SAVED BY: mpacheco

GENERAL NOTES:

1. REFER TO TYPICAL DETAIL EA030, EM102, FOR CEILING MOUNTED CONDUIT INSTALLATION AS REQUIRED.
2. REFER TO TYPICAL DETAIL EA080 FOR WALL MOUNTED CONDUIT INSTALLATION.

KEY NOTES:

1. CONDUITS CONTINUED UP TO THE MEZZANINE LEVEL. REFER TO DWG 25E15-03.

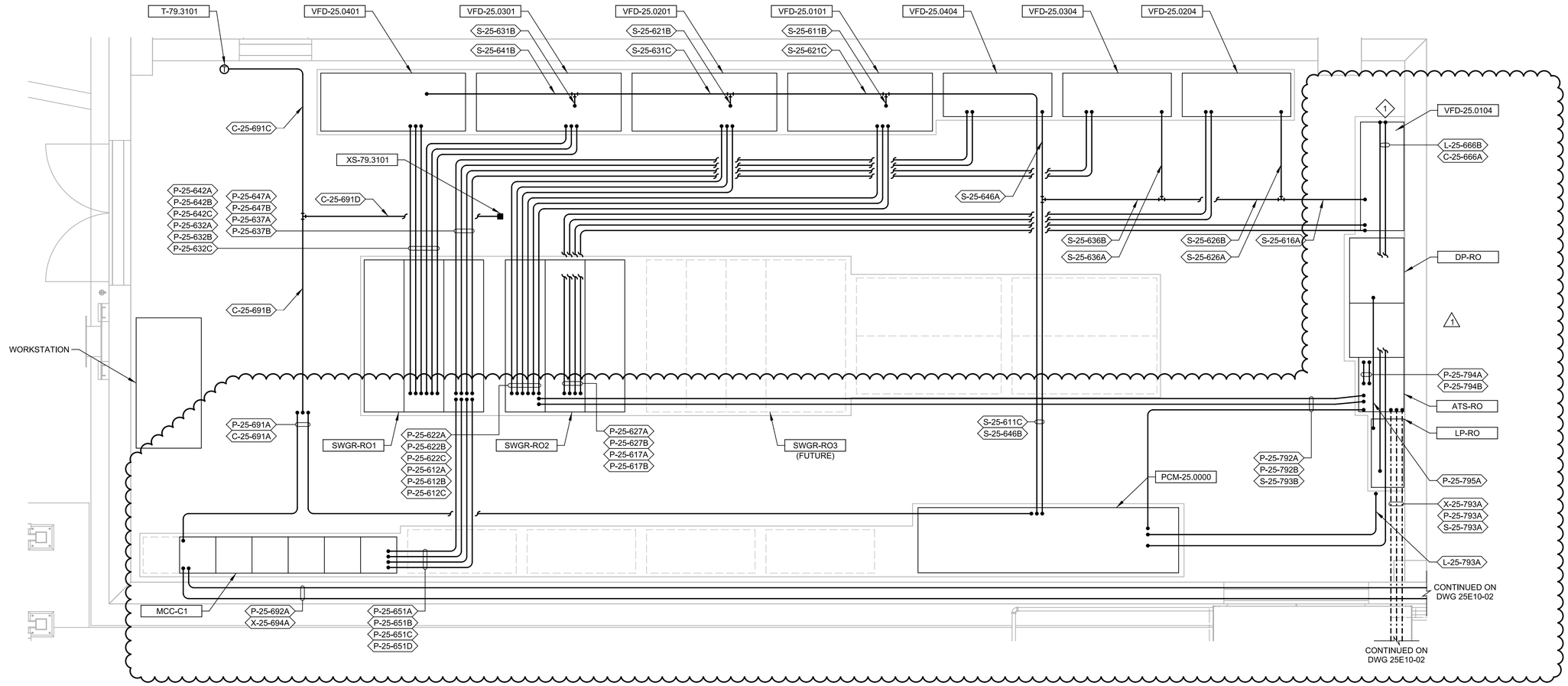

6 DETAIL

25E10-02
25E10-04

SCALE: 3/8" = 1'-0"
FILE: 10024A1025E102A

REV	DATE	BY	DESCRIPTION
1	11-19-20	AB	REVISED PER ADDENDUM NO.6

DESIGNED AB
DRAWN MNH
CHECKED JGB
DATE SEPTEMBER 2020

Digitally signed by Ashritha Banapuram
Contact Info: Carollo Engineers, Inc.
Date: 2020.11.20 10:59:00 -08'00'
Reason: Ashritha B

REGISTERED PROFESSIONAL ENGINEER
ASHRITHA BANAPURAM
No. 21815
ELECTRICAL
STATE OF CALIFORNIA

carollo

ANTIOCH CALIFORNIA
OPPORTUNITY LIVES·HERE

CITY OF ANTIOCH

ANTIOCH BRACKISH WATER DESALINATION PROJECT

ELECTRICAL

RO BUILDING ELECTRICAL ROOM
POWER AND CONTROL DETAIL - 2

VERIFY SCALES
BAR IS ONE INCH ON ORIGINAL DRAWING
0 1"
IF NOT ONE INCH ON THIS SHEET, ADJUST SCALES ACCORDINGLY

JOB NO. 10024A.10
DRAWING NO. 25E15-02
SHEET NO. 318 OF 498

PROJECT NO. 10024A10 FILE NAME: 10024A1025E1502.dgn

Plot Date: 20-NOV-2020 8:01:07 AM
User: svcPW
PlotScale: 1:1
DesignScript: Carollo_Std_Pen_v0905.pen
ColorTable: gshade.ctb
Model: Layout1
LAST SAVED BY: mpacheco

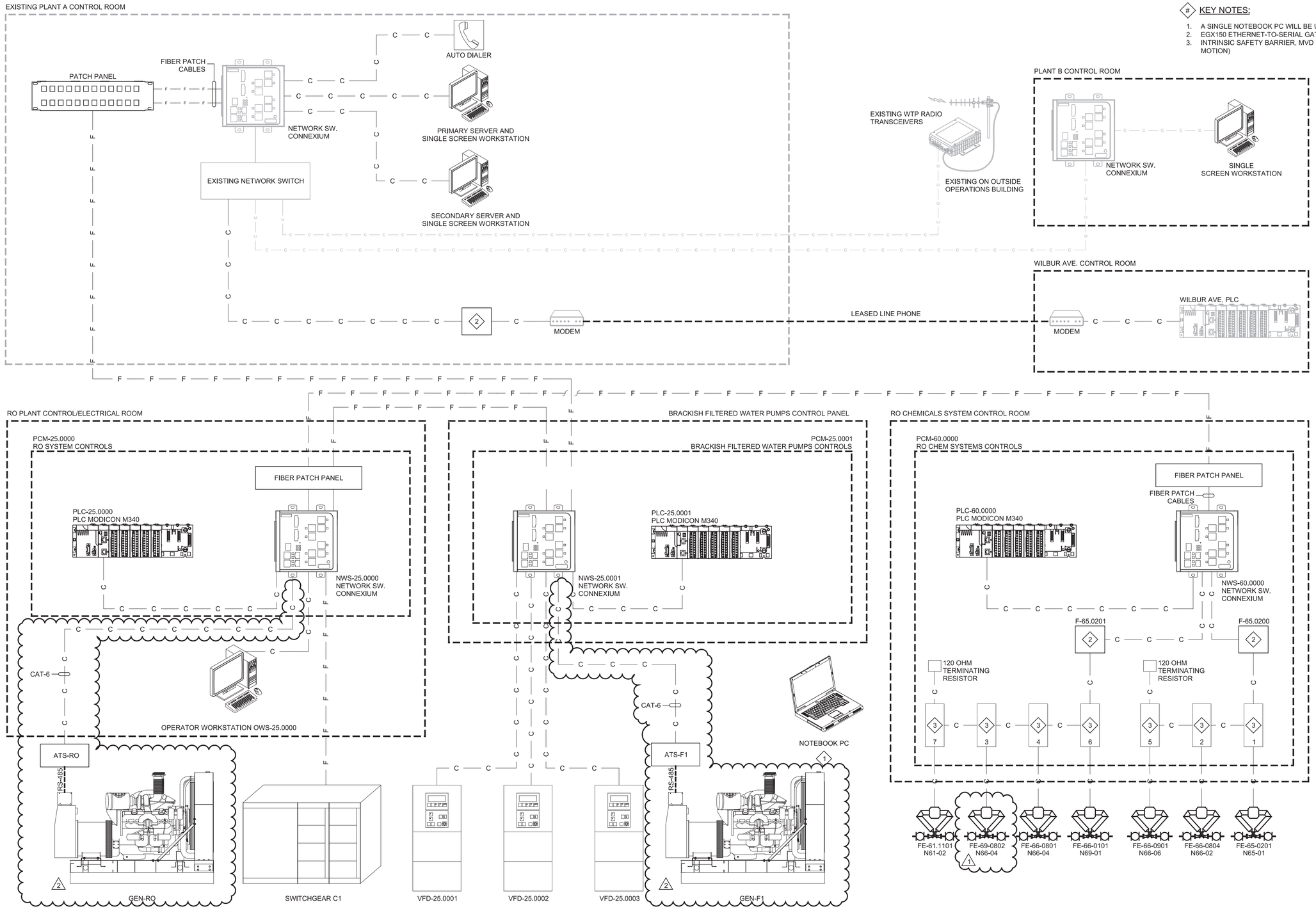

KEY NOTES:

1. A SINGLE NOTEBOOK PC WILL BE USED IN MULTIPLE LOCATIONS.
2. EGX150 ETHERNET-TO-SERIAL GATEWAY
3. INTRINSIC SAFETY BARRIER, MVD DIRECT CONNECT (MICRO MOTION)

REV	DATE	BY	DESCRIPTION
2	11-19-20	KF	REVISED PER ADDENDUM NO. 6
1	11-04-20	MMB	REVISED PER ADDENDUM NO. 3

DESIGNED AWK
DRAWN SGS
CHECKED KMP
DATE SEPTEMBER 2020

Digitally signed by Ashritha Banapuram
Contact Info: Carollo Engineers, Inc.
Date: 2020.11.19 15:48:23-08'00'

REGISTERED PROFESSIONAL ENGINEER ASHRITHA BANAPURAM No. 21815 ELECTRICAL STATE OF CALIFORNIA

carollo

ANTIOCH CALIFORNIA OPPORTUNITY LIVES·HERE

CITY OF ANTIOCH

ANTIOCH BRACKISH WATER DESALINATION PROJECT

INSTRUMENTATION

OVERVIEW
SCADA BLOCK DIAGRAM - 1

VERIFY SCALES
BAR IS ONE INCH ON ORIGINAL DRAWING
0 1"
IF NOT ONE INCH ON THIS SHEET, ADJUST SCALES ACCORDINGLY

JOB NO. 10024A.10
DRAWING NO. 00N03-01
SHEET NO. 346 OF 498

PROJECT NO. 10024A10 FILE NAME: 10024A1000N0301.dgn

Model: Layout1 ColorTable: gshade.ctb DesignScript: Carollo_Std_Pen_v0905.pen PlotScale: 1:1 Plot Date: 18-NOV-2020 11:52:47 AM User: svcPW LAST SAVED BY: sshepard

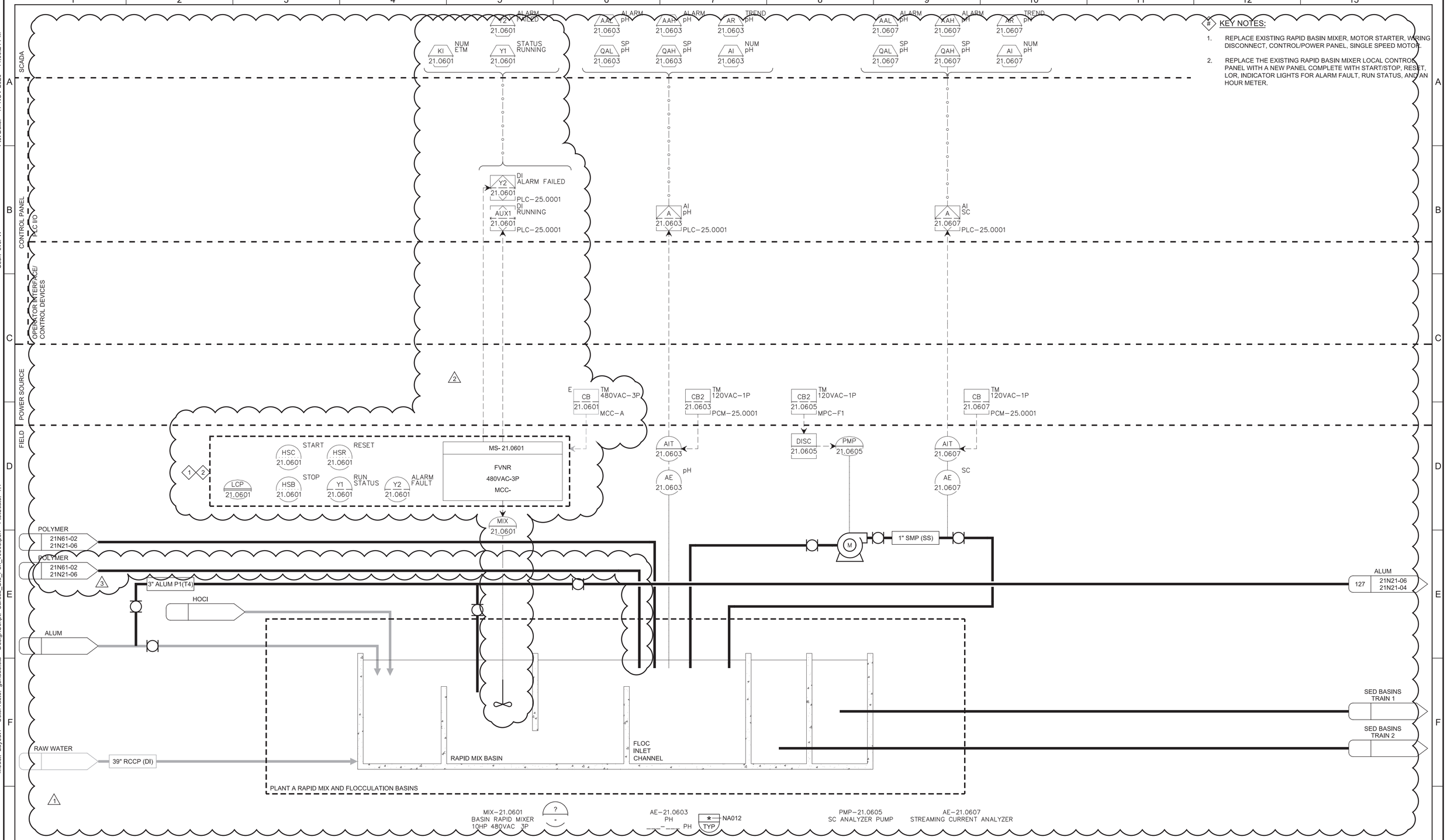

KEY NOTES:

1. REPLACE EXISTING RAPID BASIN MIXER, MOTOR STARTER, WIRING DISCONNECT, CONTROL/POWER PANEL, SINGLE SPEED MOTOR.
2. REPLACE THE EXISTING RAPID BASIN MIXER LOCAL CONTROL PANEL WITH A NEW PANEL COMPLETE WITH START/STOP, RESET, LOR, INDICATOR LIGHTS FOR ALARM FAULT, RUN STATUS, AND AN HOUR METER.

REV	DATE	BY	DESCRIPTION
3	11-19-20	KF	REVISED ADDENDUM NO. 6
2	11-10-20	KF	REVISED ADDENDUM NO. 4
1	11-04-20	MMB	REVISED ADDENDUM NO. 3

DESIGNED AWK
DRAWN SGS
CHECKED KMP
DATE SEPTEMBER 2020

Digitally signed by Ashritha Banapuram
Contact Info: Carollo Engineers, Inc.
Date: 2020.11.19 15:48:01-06'00'

REGISTERED PROFESSIONAL ENGINEER ASHRITHA BANAPURAM No. 21815 ELECTRICAL STATE OF CALIFORNIA

carollo

ANTIOCH CALIFORNIA OPPORTUNITY LIVES·HERE

CITY OF ANTIOCH
ANTIOCH BRACKISH WATER DESALINATION PROJECT
INSTRUMENTATION
RAW WATER SUPPLY TO PLANTS A AND B P&ID - 3

VERIFY SCALES
BAR IS ONE INCH ON ORIGINAL DRAWING
0 1"
IF NOT ONE INCH ON THIS SHEET, ADJUST SCALES ACCORDINGLY

JOB NO. 10024A.10
DRAWING NO. 21N21-06
SHEET NO. 362 OF 498

PROJECT NO. 10024A10 FILE NAME: 10024A1021N2106.dwg

Plot Date: 17-NOV-2020 11:00:24 PM
User: svcPW
Model: Layout1 ColorTable: gshade.ctb DesignScript: Carollo_Std_Pen_v0905.pen PlotScale: 1:1
LAST SAVED BY: sshepard

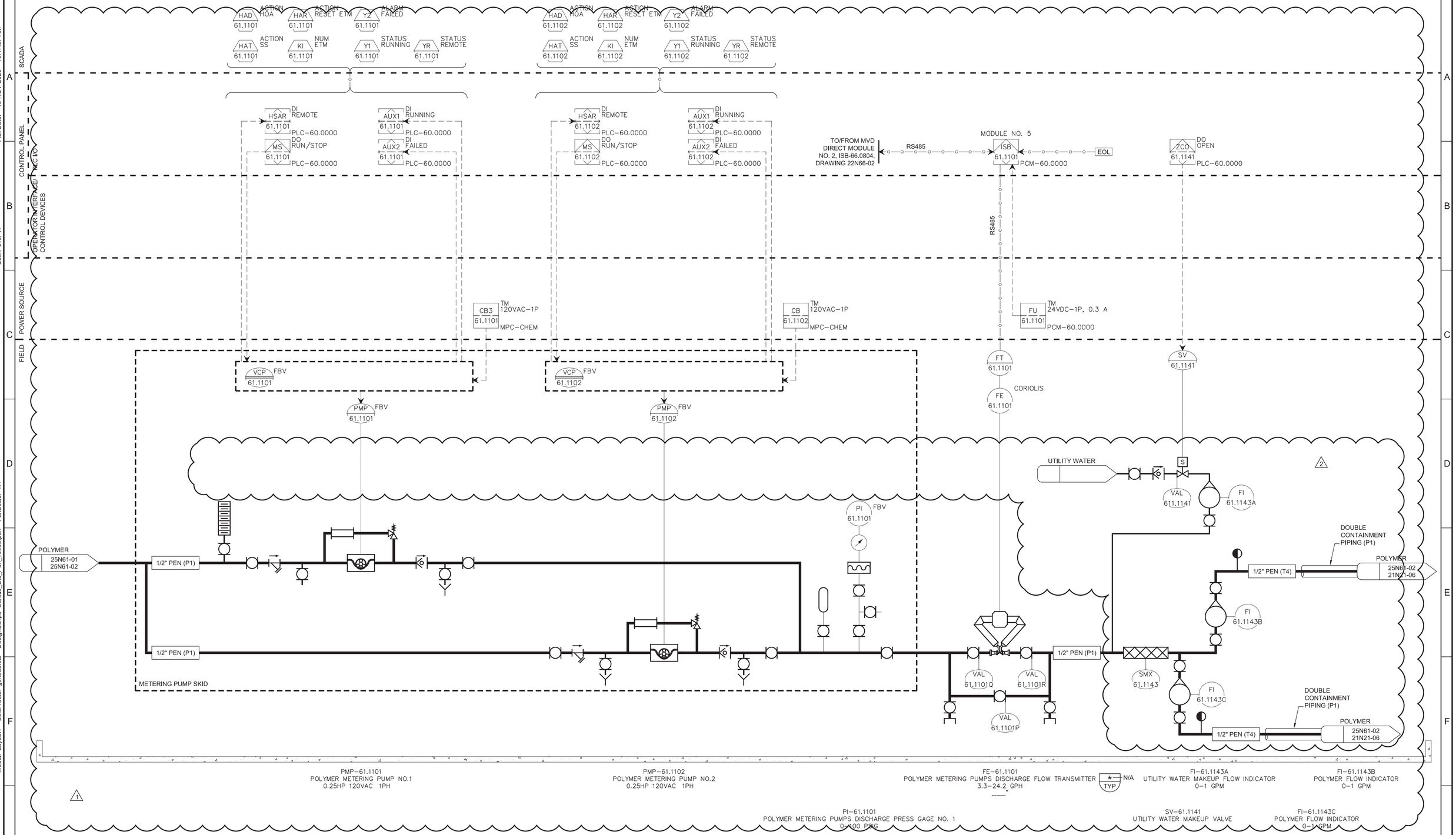

REV	DATE	BY	DESCRIPTION
2	11-19-20	KF	REVISED PER ADDENDUM NO. 6
1	11-04-20	MMB	REVISED PER ADDENDUM NO. 3

DESIGNED AWK
DRAWN LM
CHECKED KMP
DATE SEPTEMBER 2020

Digitally signed by Ashritha Banapuram
Contact Info: Carollo Engineers, Inc.
Date: 2020.11.19 15:46:59 -05'00'

REGISTERED PROFESSIONAL ENGINEER ASHRITHA BANAPURAM No. 21815 ELECTRICAL STATE OF CALIFORNIA

carollo

ANTIOCH CALIFORNIA OPPORTUNITY LIVES HERE

CITY OF ANTIOCH
ANTIOCH BRACKISH WATER DESALINATION PROJECT
INSTRUMENTATION
POLYMER
METERING P&ID - 2

VERIFY SCALES
BAR IS ONE INCH ON ORIGINAL DRAWING
0 1"
IF NOT ONE INCH ON THIS SHEET, ADJUST SCALES ACCORDINGLY

JOB NO. 10024A.10
DRAWING NO. 25N61-02
SHEET NO. 420B OF 498

PROJECT NO. 10024A10 FILE NAME: 10024A1025N6102.dwg

Model: Layout1 ColorTable: gshade.ctb DesignScript: Carollo_Std_Pen_v0905.pen PlotScale: 1:1 User: svcPW Plot Date: 19-NOV-2020 10:47:07 AM LAST SAVED BY: sshepard